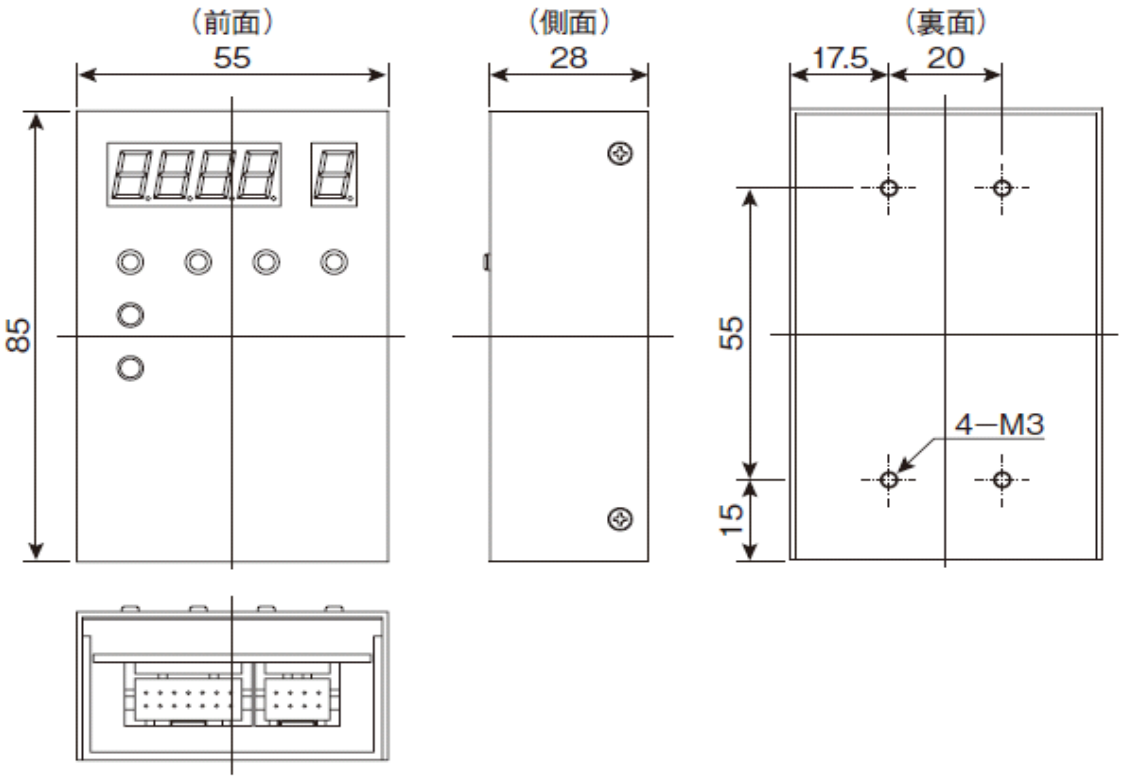

(C)Shinano Kenshi Co., Ltd. All rights reserved.

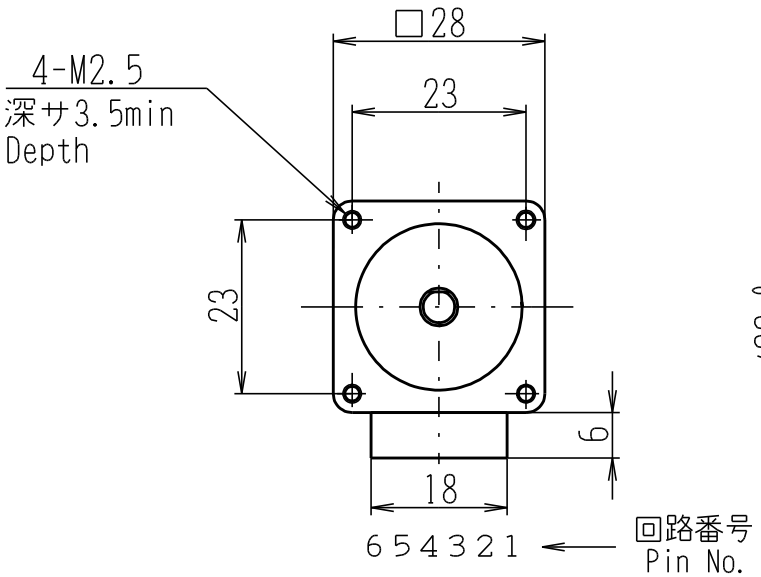

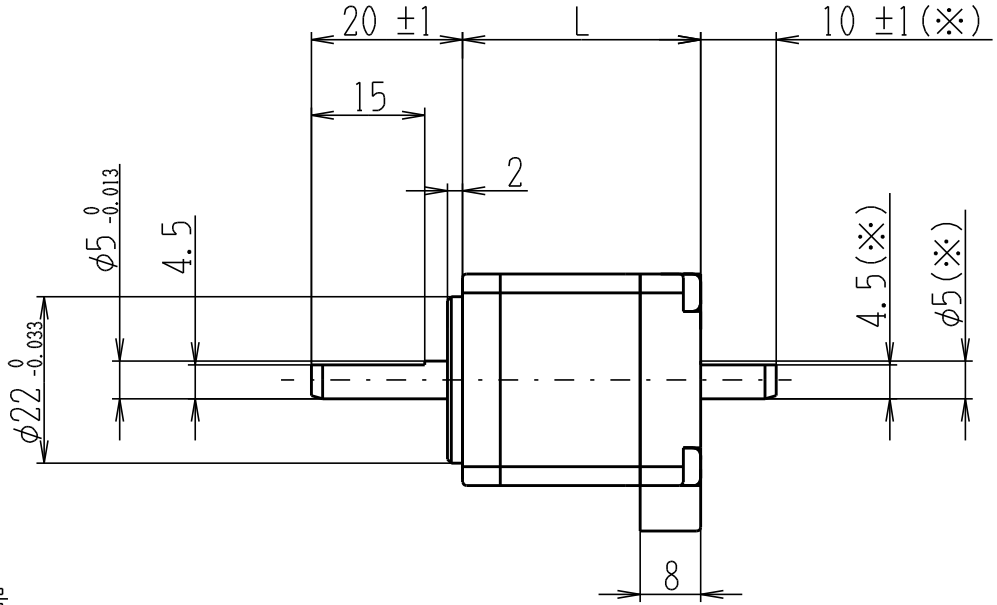

※両軸タイプのみの寸法です
Dimensions apply to double shaft modeles.

Header	MOLEX INC:53254-0670
Mating connector	MOLEX INC:51065-0600

品 名 Model No.	モータ長L(mm) Motor length
PMSA-U28D1■	31.5
PMSA-U28D2■	39.5
PMSA-U28D4■	50.5

(C) Shinano Kenshi Co.,Ltd. All rights reserved.