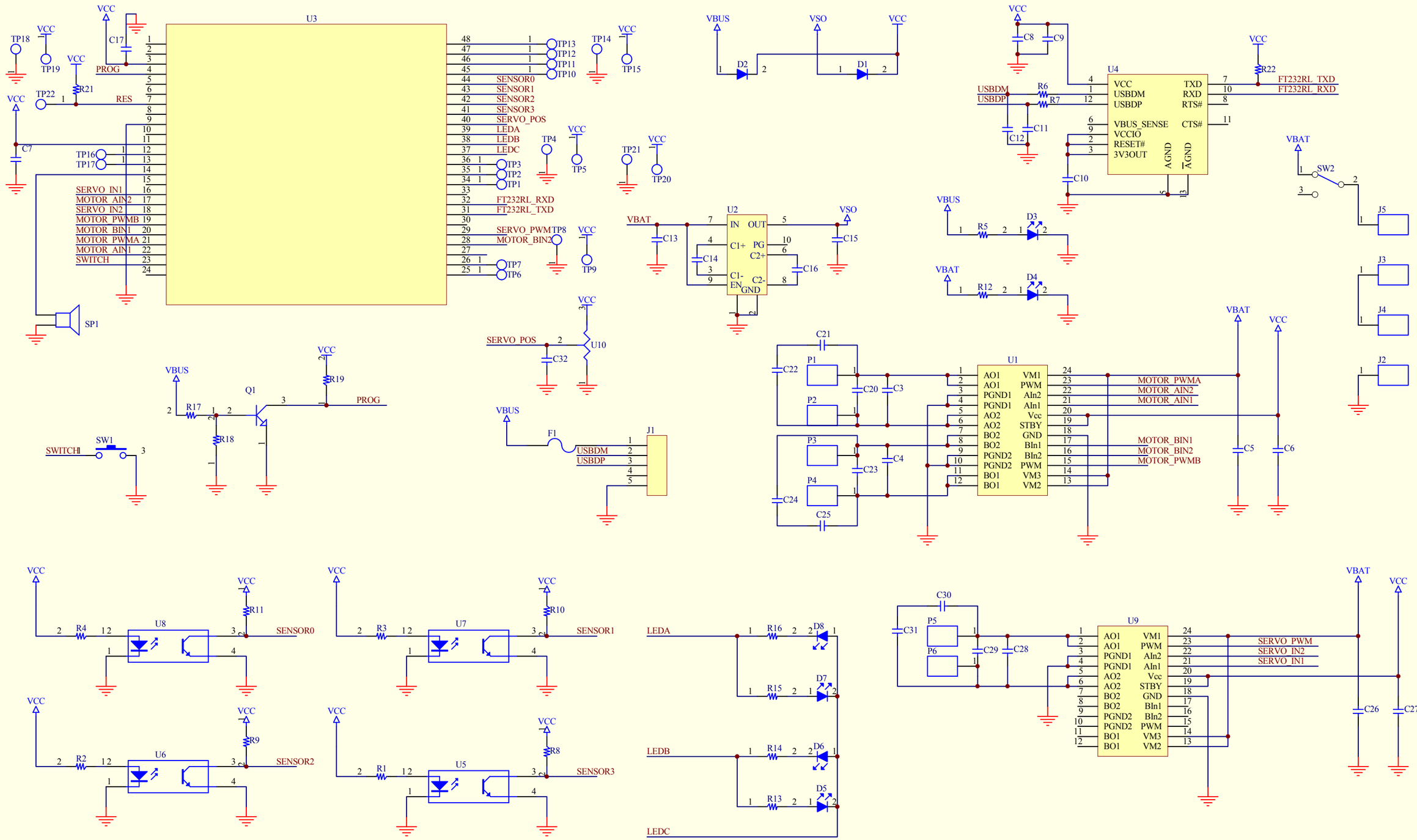

Title

Size	Number	Revision
A3		

Date: 6-Nov-2014 Sheet of

File: \\tsclient\E:\YŒv\^êŽ3•ÛŠÇ‚Ì—p‚ª‚Ì‚Ý‚ÌŽ‘‘ˆŒ[ƒT‚[4—Ó"ÃŠ?"Ä%ä"Ä\ƒ}ƒCƒRƒ