LVX-IR4301M PWM Power Amplifier Module

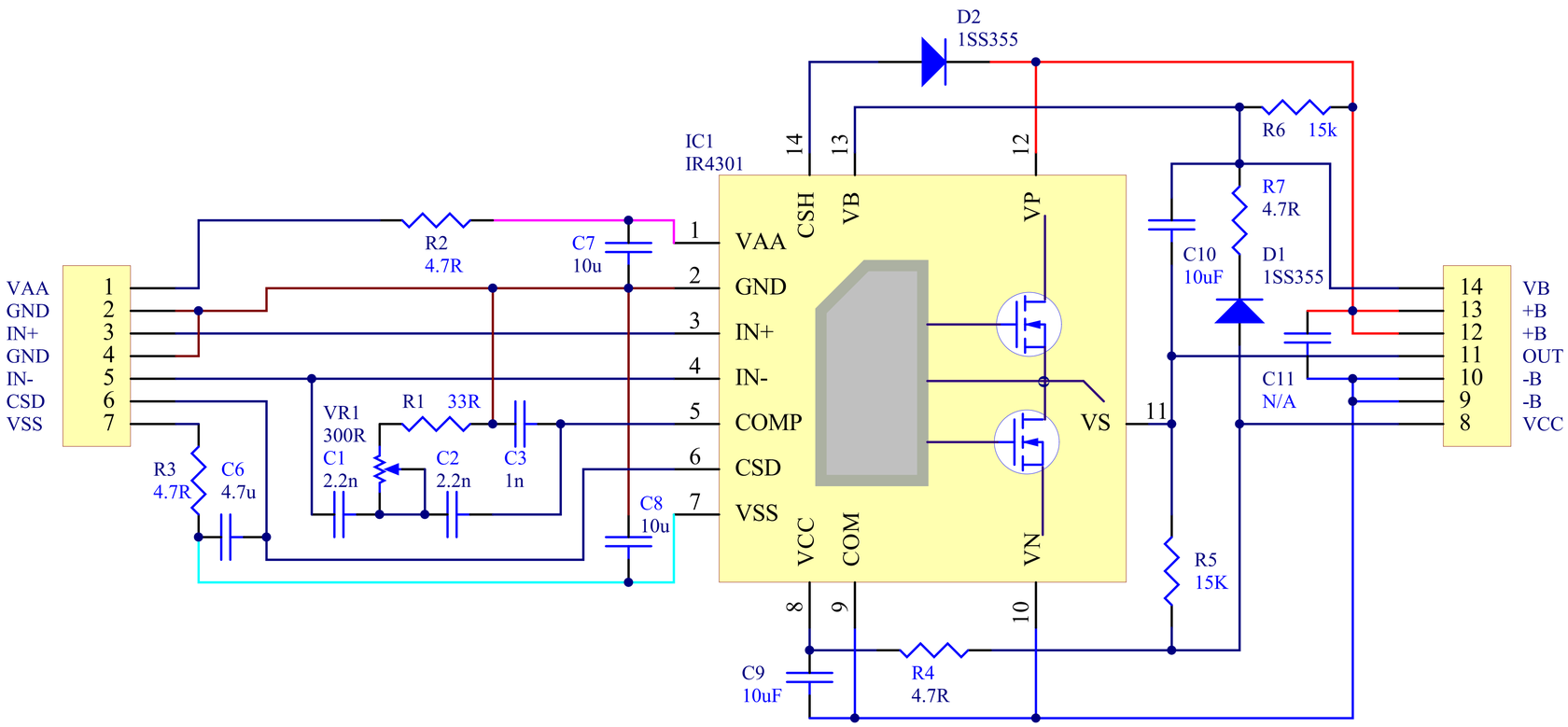

Title		
LVX-IR4301M Module		
Size A	Number	Revision 1.0
Date: 2012/12/09	Sheet of	
File: F:\LV-2\..\LVX-IR4301M_AMPMODULE.SchDoc	Drawn By:	