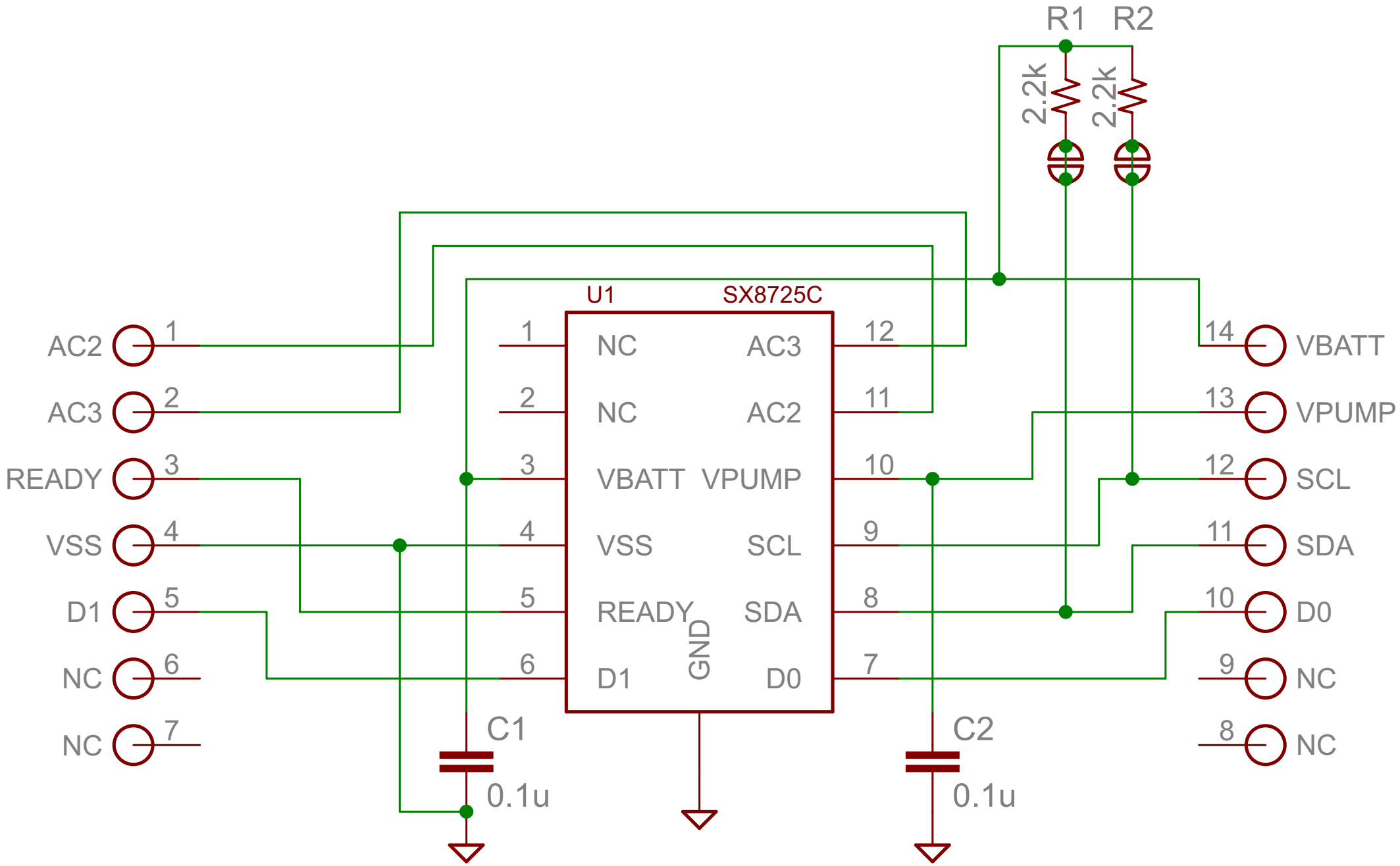
R1
R2
2.2k
2.2k
U1
SX8725C
AC2
AC3
READY
VSS
D1
NC
NC
1
2
3
4
5
6
7
NC
NC
VBATT
VSS
READY
D1
GND
AC3
AC2
VPUMP
SCL
SDA
D0
12
11
10
9
8
7
VBATT
VPUMP
SCL
SDA
D0
NC
NC
14
13
12
11
10
9
8
C1
0.1u
C2
0.1u