REVISIONS			
LTR	DESCRIPTION	DATE (YR-MO-DA)	APPROVED
A	Correction to case outline dimensions. Changes to table I.	1987 Nov 17	M. A. Frye
B	Change data hold time limits. Change conditions for reference output voltage. Change footnote 2. Add footnote to reference input resistance test. Delete compliance voltage test. Device type 01 inactive for new design, see table I footnote 4/.	1989 JAN 9	M. A. Frye

INACTIVE FOR NEW DESIGN AS OF 9 JAN 1989, SEE FOOTNOTE 4, TABLE I

CURRENT CAGE CODE 67268

REV																								
SHEET																								
REV																								
SHEET																								
REV STATUS OF SHEETS	REV	B	B	B	B	B	B	B	B		B		B											
	SHEET	1	2	3	4	5	6	7	8	9	10	11	12											

PMIC N/A

STANDARDIZED MILITARY DRAWING

THIS DRAWING IS AVAILABLE FOR USE BY ALL DEPARTMENTS AND AGENCIES OF THE DEPARTMENT OF DEFENSE

AMSC N/A

PREPARED BY: Joseph A. Kerby

CHECKED BY: R. E. Johnson

APPROVED BY: M. A. Frye

DRAWING APPROVAL DATE: 1987 Mar 19

REVISION LEVEL: B

DEFENSE ELECTRONICS SUPPLY CENTER
DAYTON, OHIO 45444

MICROCIRCUIT, LINEAR MICROPROCESSOR COMPATIBLE, 12-BIT D/A CONVERTER, MONOLITHIC SILICON

SIZE	CAGE CODE	
A	14933	5962-87801

SHEET 1 OF 12

DESC FORM 193-1
SEP 87

* U.S. GOVERNMENT PRINTING OFFICE: 1987 — 748-129/60912

5962-E973

DISTRIBUTION STATEMENT A. Approved for public release; distribution is unlimited.

1. SCOPE

1.1 Scope. This drawing describes device requirements for class B microcircuits in accordance with 1.2.1 of MIL-STD-883, "Provisions for the use of MIL-STD-883 in conjunction with compliant non-JAN devices".

1.2 Part number. The complete part number shall be as shown in the following example:

5962-87801	01	X	X
Drawing number	Device type (1.2.1)	Case outline (1.2.2)	Lead finish per MIL-M-38510

1.2.1 Device type. The device type shall identify the circuit function as follows:

Device type	Generic number	Circuit function
01	AD567	12-bit current output D/A converter, microprocessor compatible.

1.2.2 Case outline. The case outline shall be as designated in appendix C of MIL-M-38510, and as follows:

Outline letter	Case outline
X	D-10, (28-lead, 1.490" x .610" x .232"), dual-in-line package.

1.3 Absolute maximum ratings.

V_{CC} to POWER GROUND	0 V dc to +18 V dc
V_{EE} to POWER GROUND	0 V dc to -18 V dc
Voltage on DAC OUT (pin 2)	-3 V dc to +12 V dc
Digital inputs (pins 10-15, 17-28) to POWER GROUND	-1.0 V dc to 7.0 V dc
V_{REF} IN to REF GND	±12 V dc
BIP OFFSET to REF GND	±12 V dc
10 V SPAN R to REF GND	±12 V dc
20 V SPAN R to REF GND	±24 V dc
V_{REF} OUT short to POWER GROUND	Continuous
Power dissipation (P_D)	1,000 mW
Storage temperature range	-65°C to +150°C
Lead temperature (soldering, 10 seconds)	+300°C
Thermal resistance, junction to case (θ_{JC})	See MIL-M-38510, appendix C
Thermal resistance, junction to ambient (θ_{JA})	60°C/W

1.4 Recommended operating conditions.

Supply voltage, V_{CC}	+15 V dc
Supply voltage, V_{EE}	-15 V dc
Ambient operating temperature range (T_A)	-55°C to +125°C

☆ U.S. GOVERNMENT PRINTING OFFICE: 1988—550-547

2. APPLICABLE DOCUMENTS

2.1 Government specification and standard. Unless otherwise specified, the following specification and standard, of the issue listed in that issue of the Department of Defense Index of Specifications and Standards specified in the solicitation, form a part of this drawing to the extent specified herein.

SPECIFICATION

MILITARY

MIL-M-38510 - Microcircuits, General Specification for.

STANDARD

MILITARY

MIL-STD-883 - Test Methods and Procedures for Microelectronics.

(Copies of the specification and standard required by manufacturers in connection with specific acquisition functions should be obtained from the contracting activity or as directed by the contracting activity.)

2.2 Order of precedence. In the event of a conflict between the text of this drawing and the references cited herein, the text of this drawing shall take precedence.

3. REQUIREMENTS

3.1 Item requirements. The individual item requirements shall be in accordance with 1.2.1 of MIL-STD-883, "Provisions for the use of MIL-STD-883 in conjunction with compliant non-JAN devices" and as specified herein.

3.2 Design, construction, and physical dimensions. The design, construction, and physical dimensions shall be as specified in MIL-M-38510 and herein.

3.2.1 Terminal connections. The terminal connections shall be as specified on figure 1.

3.2.2 Truth table. The truth table shall be as specified on figure 2.

3.2.3 Functional diagram. The functional block diagram shall be as specified on figure 3.

3.2.4 Case outline. The case outline shall be in accordance with 1.2.2 herein.

3.3 Electrical performance characteristics. Unless otherwise specified, the electrical performance characteristics are as specified in table I and apply over the full ambient operating temperature range.

3.4 Marking. Marking shall be in accordance with MIL-STD-883 (see 3.1 herein). The part shall be marked with the part number listed in 1.2 herein. In addition, the manufacturer's part number may also be marked as listed in 6.4 herein.

TABLE I. Electrical performance characteristics.

Test	Symbol	Conditions 1/ $-55°C \le T_A \le +125°C$ (unless otherwise specified)	Group A subgroups	Limits Min	Limits Max	Unit
Relative accuracy	R_A	All bits with positive errors on; All bits with negative errors on.	1		±1/2	LSB
			2, 3		±3/4	
Differential nonlinearity	DNL	Major carry errors	1		±3/4	
			2, 3		±1	
Gain error	A_E	All bits on	1		±0.25	%FSR
Gain temperature coefficient	TCA_E		2, 3		±30	ppm of FSR/°C
Unipolar offset error	V_{OS}	All bits off	1		±0.05	%FSR
Unipolar offset temperature coefficient	TCV_{OS}		2, 3		±2	ppm of FSR/°C
Bipolar zero error	B_{PZE}	MSB on, all other bits off; bipolar mode	1		±0.15	%FSR
Bipolar zero temperature coefficient	TCB_{PZE}		2, 3		±10	ppm of FSR/°C
Reference input 2/ resistance	R_{IN}	$T_A = +25°C$	1	15	25	kΩ
Output resistance	R_{OUT}	Excluding span resistor $T_A = +25°C$		6	10	
Reference output voltage 3/	V_{REF}	Unipolar mode, 1.1 mA external load, $V_{CC} = +12$ V, $V_{EE} = -12$ V	1, 2, 3	9.9	10.10	V

See footnotes at end of table.

★ U.S. GOVERNMENT PRINTING OFFICE: 1988—550-547

TABLE I. Electrical performance characteristics - Continued.

Test	Symbol	Conditions 1/ $-55°C \le T_A \le +125°C$ (unless otherwise specified)	Group A sub-groups	Limits Min	Limits Max	Unit
Output current 4/	I_{OUT}	Unipolar mode, V_{IH} = 5 V, All bits on, T_A = +25°C	1	-1.6	-2.4	mA
		Bipolar mode, V_{IH} = 5 V, All bits on, T_A = +25°C		±0.8	±1.2	
Power supply rejection ratio 4/	PSRR	+11.4 V $\le V_{CC} \le$ +16.5 V, T_A = +25°C	1		10	ppm of FSR/%
		-16.5 V $\le V_{EE} \le$ -11.4 V, T_A = +25°C			25	
Power supply current 4/	I_{CC}	V_{CC} = +16.5 V, V_{EE} = -16.5 V, All bits low, T_A = +25°C	1		5	mA
	I_{EE}				-25	
Power dissipation 4/ 5/	P_D		1		495	mW
Digital input high voltage 4/	V_{IH}	T_A = +25°C	1	2.0		V
Digital input low voltage	V_{IL}		1		0.8	
			2, 3		0.7	
Digital input high current 4/	I_{IH}	V_{IH} = 5.5 V, T_A = +25°C	1		±300	µA
Digital input low current 4/	I_{IL}	V_{IL} = 0 V, T_A = +25°C			±100	
Functional tests		see 4.3.1c	7, 8			

See footnotes at end of table.

☆ U.S. GOVERNMENT PRINTING OFFICE: 1988—550-547

TABLE I. Electrical performance characteristics - Continued.

Test	Symbol	Conditions 1/ $-55°C \le T_A \le +125°C$ (unless otherwise specified)	Group A subgroups	Limits		Unit
				Min	Max	
Output current settling time	t_{SL}	see figure 4 2/ 4/ $T_A = +25°C$	9		500	ns
Write pulse width	t_{WR}			100		
Data setup time	t_{DW}			50		
Data hold time	t_{DH}			10		
$\overline{CS}$ Valid to end of $\overline{WR}$	t_{CW}			100		
Address valid to end of $\overline{WR}$	t_{AW}			100		

1/ V_{CC} = +15 V dc, V_{EE} = -15 V dc, 50Ω resistor pin 6 to pin 8, pins 10-15 = logic "0", V_{IH} = 2.0 V, V_{IL} = 0.8 V, unless otherwise specified.

2/ Guaranteed if not tested parameter.

3/ In subgroup 1, the reference output is loaded with 0.5 mA nominal reference current and 1.1 mA Bipolar offset current, with the DAC in +10 V range, unipolar mode. In subgroups 2 and 3, only the 0.5 mA reference input current is applied. The reference must be buffered to supply external loads at elevated temperatures.

4/ These parametric limits represent +25°C characterization and testing only. For these particular parameters, device type 01 does not meet the full military operating range requirements of 1.2.1 of MIL-STD-883.

5/ Power dissipation performance is checked as part of the power supply current test, I_{CC}, I_{EE}.

3.5 Certificate of compliance. A certificate of compliance shall be required from a manufacturer in order to be listed as an approved source of supply in 6.4. The certificate of compliance submitted to DESC-ECS prior to listing as an approved source of supply shall state that the manufacturer's product meets the requirements of MIL-STD-883 (see 3.1 herein) and the requirements herein.

3.6 Certificate of conformance. A certificate of conformance as required in MIL-STD-883 (see 3.1 herein) shall be provided with each lot of microcircuits delivered to this drawing.

3.7 Notification of change. Notification of change to DESC-ECS shall be required in accordance with MIL-STD-883 (see 3.1 herein).

3.8 Verification and review. DESC, DESC's agent, and the acquiring activity retain the option to review the manufacturer's facility and applicable required documentation. Offshore documentation shall be made available onshore at the option of the reviewer.

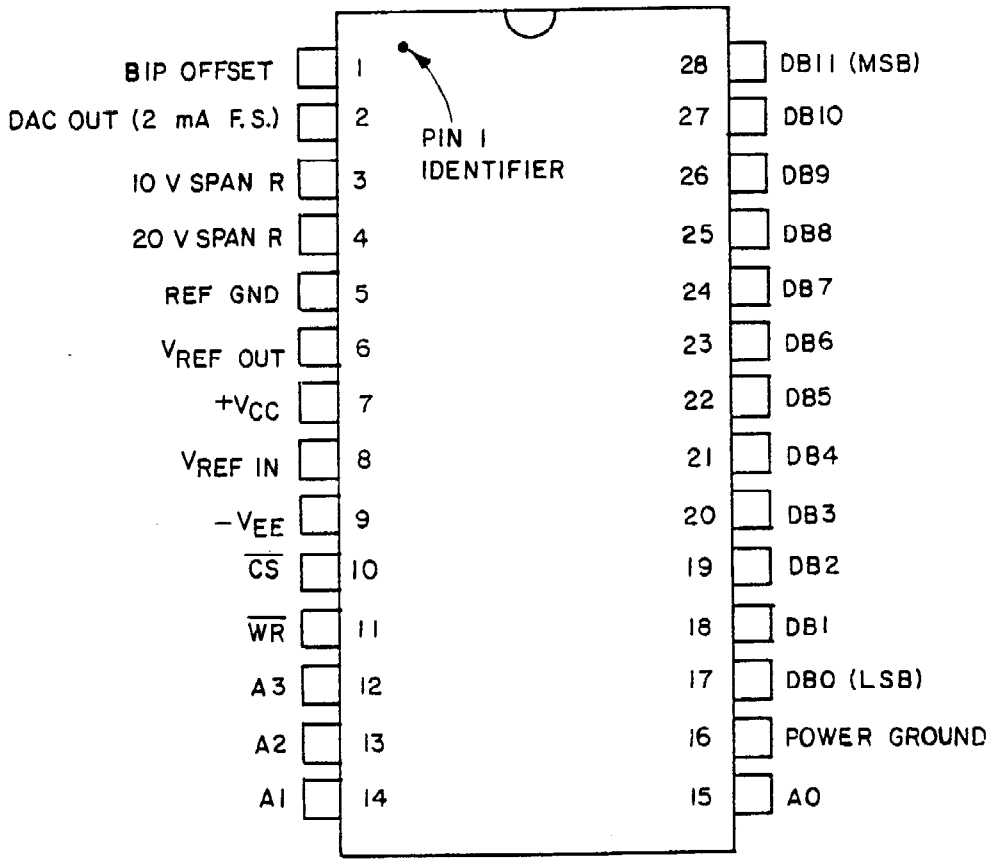

FIGURE 1. Terminal connections (top view).

$\overline{CS}$	$\overline{WR}$	A3	A2	A1	A0	Operation
1	X	X	X	X	X	No operation
X	1	X	X	X	X	No operation
0	0	1	1	1	0	Enable 4 LSBs of first rank
0	0	1	1	0	1	Enable 4 middle bits of first rank
0	0	1	0	1	1	Enable 4 MSBs of first rank
0	0	0	1	1	1	Loads second rank from first rank
0	0	0	0	0	0	All latches transparent

X = Don't care

FIGURE 2. Truth table.

☆ U.S. GOVERNMENT PRINTING OFFICE: 1987—549-096

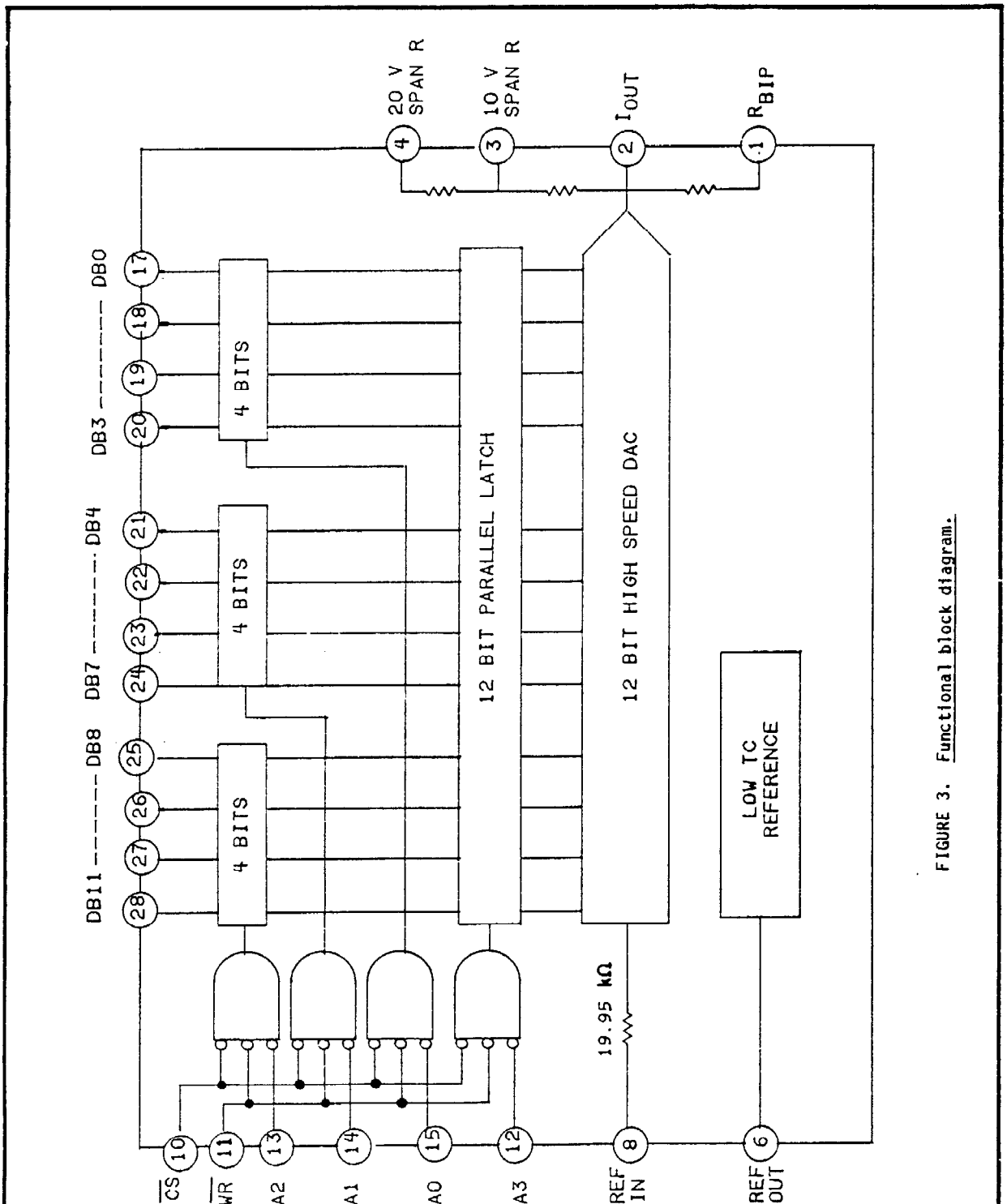

FIGURE 3. Functional block diagram.

☆ U.S. GOVERNMENT PRINTING OFFICE: 1987—548-096

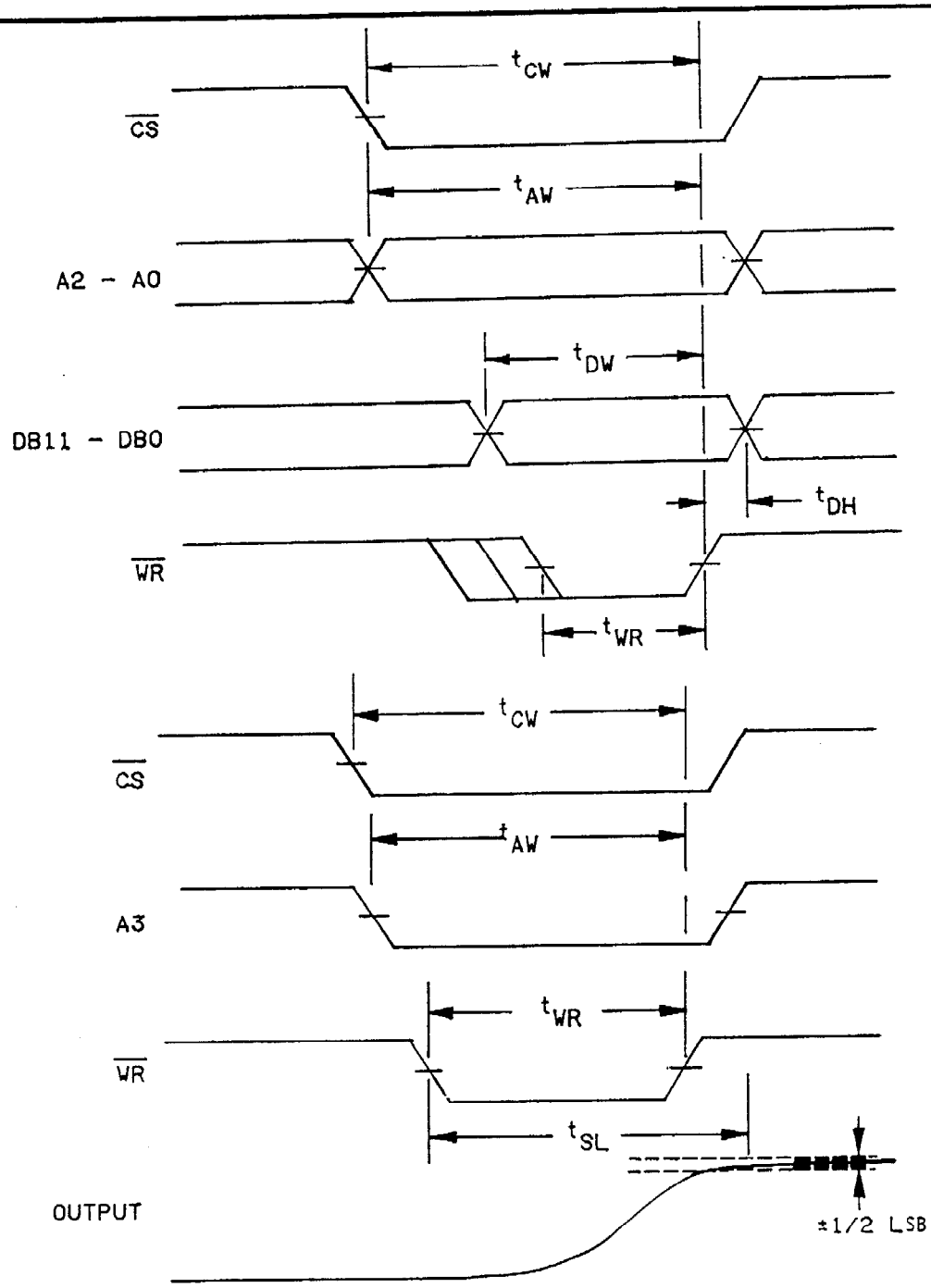

FIGURE 4. Switching waveforms.

☆ U.S. GOVERNMENT PRINTING OFFICE 1987—549-096

4. QUALITY ASSURANCE PROVISIONS

4.1 Sampling and inspection. Sampling and inspection procedures shall be in accordance with section 4 of MIL-M-38510 to the extent specified in MIL-STD-883 (see 3.1 herein).

4.2 Screening. Screening shall be in accordance with method 5004 of MIL-STD-883, and shall be conducted on all devices prior to quality conformance inspection. The following additional criteria shall apply:

a. Burn-in test, method 1015 of MIL-STD-883.

(1) Test condition A, B, C, or D using the circuit submitted with the certificate of compliance (see 3.5 herein).

(2) T_A = +125°C, minimum.

b. Interim and final electrical test parameters shall be as specified in table II herein, except interim electrical parameter tests prior to burn-in are optional at the discretion of the manufacturer.

4.3 Quality conformance inspection. Quality conformance inspection shall be in accordance with method 5005 of MIL-STD-883 including groups A, B, C, and D inspections. The following additional criteria shall apply.

4.3.1 Group A inspection.

a. Tests shall be as specified in table II herein.

b. Subgroups 4, 5, 6, 10, and 11 in table I, method 5005 of MIL-STD-883 shall be omitted.

c. Subgroups 7 and 8 shall verify the truth table.

4.3.2 Groups C and D inspections.

a. End-point electrical parameters shall be as specified in table II herein.

b. Steady-state life test conditions, method 1005 of MIL-STD-883.

(1) Test condition A, B, C, or D using the circuit submitted with the certificate of compliance (see 3.5 herein).

(2) T_A = +125°C, minimum.

(3) Test duration: 1,000 hours, except as permitted by method 1005 of MIL-STD-883.

TABLE II. Electrical test requirements.

MIL-STD-883 test requirements	Subgroups (per method 5005, table I)
Interim electrical parameters (method 5004)	1
Final electrical test parameters (method 5004)	1*, 2, 3
Group A test requirements (method 5005)	1, 2, 3, 7, 8, 9**
Groups C and D end-point electrical parameters (method 5005)	1

* PDA applies to subgroup 1.
** Subgroup 9, if not tested, shall be guaranteed to the limits specified in table I.

5. PACKAGING

5.1 Packaging requirements. The requirements for packaging shall be in accordance with MIL-M-38510.

6. NOTES

6.1 Intended use. Microcircuits conforming to this drawing are intended for use when military specifications do not exist and qualified military devices that will perform the required function are not available for OEM application. When a military specification exists and the product covered by this drawing has been qualified for listing on QPL-38510, the device specified herein will be inactivated and will not be used for new design. The QPL-38510 product shall be the preferred item for all applications.

6.2 Replaceability. Microcircuits covered by this drawing will replace the same generic device covered by a contractor-prepared specification or drawing.

6.3 Comments. Comments on this drawing should be directed to DESC-ECS, Dayton, Ohio 45444, or telephone 513-296-5375.

6.4 Approved source of supply. An approved source of supply is listed herein. Additional sources will be added as they become available. The vendor listed herein has agreed to this drawing and a certificate of compliance (see 3.5 herein) has been submitted to DESC-ECS.

Military drawing part number	Vendor CAGE number	Vendor similar part number 1/
5962-8780101XX 2/	51640	AD567SD/883B

1/ Caution. Do not use this number for item acquisition. Items acquired to this number may not satisfy the performance requirements of this drawing.

2/ Device type 01 inactive for new design.

Vendor CAGE number	Vendor name and address
51640	Analog Devices 804 Woburn St. Wilmington, MA. 01887

☆ U.S. GOVERNMENT PRINTING OFFICE: 1988—550-547