THIS DRAWING IS A CONTROLLED DOCUMENT FOR AMP INCORPORATED. IT IS SUBJECT TO CHANGE AND THE CONTROLLING ENGINEERING ORGANIZATION SHOULD BE CONTACTED FOR THE LATEST REVISION.

LOC	DIST
J	—

REVISIONS 変更

P	LTR	DESCRIPTION	ECN	DATE	DWN	APVD
	F	REDRAWN	FJ00-1640-97	31.OCT.'97	H.H	SK

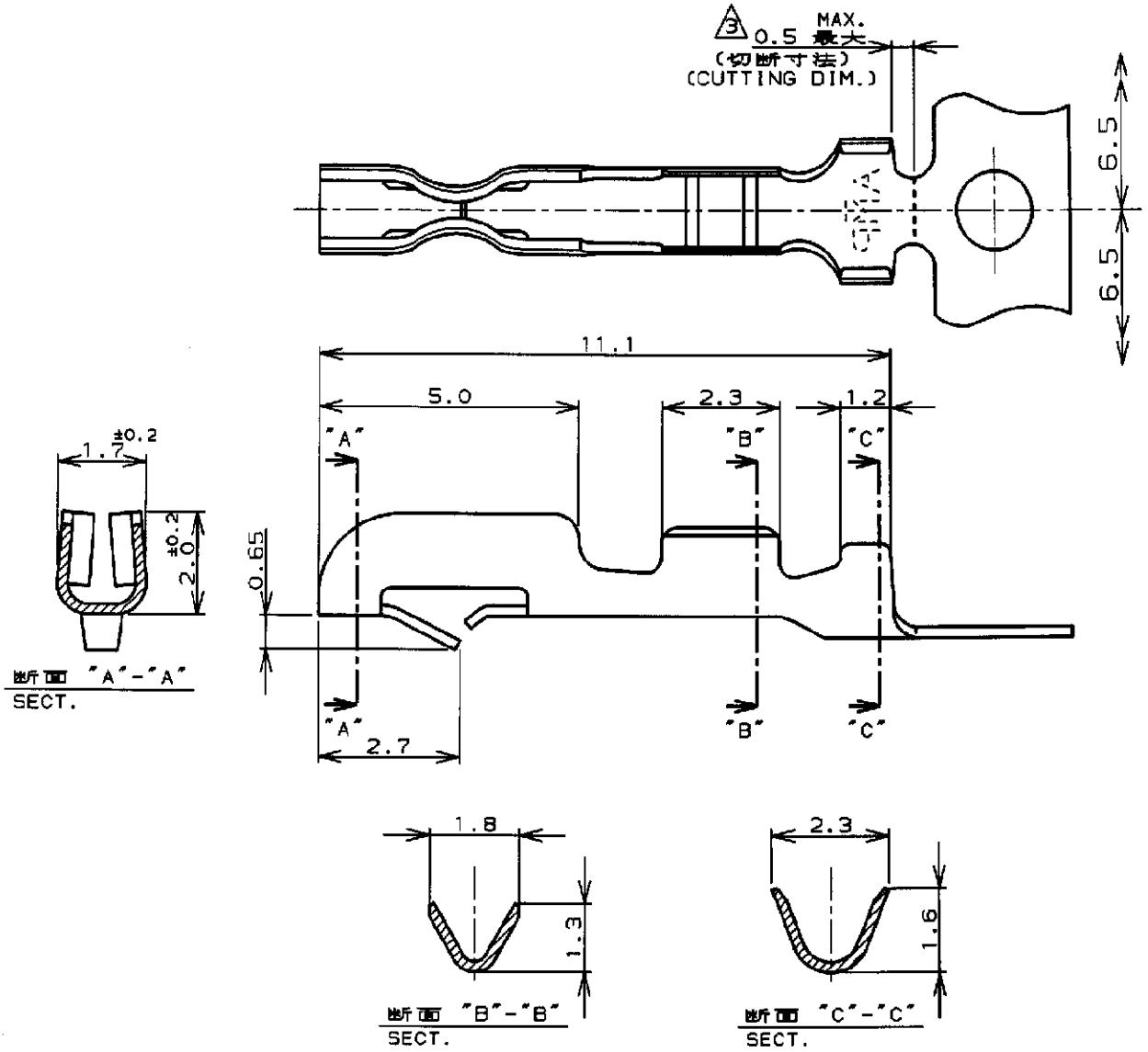

NOTES:

1. HOUSINGS, P/N: 171822 AND 171880 ARE USED.
2. L/P CONTACT P/N: 170205-2.

3 HAND TOOL P/N: 722561-1.

注記:

1. 使用ハウジングは製品型番:171822及び171880.
2. L/P端子 製品型番:170205-2.

3 適用手動工具 製品型番:722561-1.

THIS DRAWING IS UNPUBLISHED. © COPYRIGHT 19 BY AMP INCORPORATED. ALL RIGHTS RESERVED. RELEASED FOR PUBLICATION ,19 .

WIRE RANGE 被覆電線断面積	0.05～0.15mm²(AWG30～26)
INSULATION DIA 被覆外径	1.0～1.4mm
MATERIAL 材料	PHOS BR 0.2mm THICKNESS
FINISH 仕上	PRE-TIN
DIMENSIONS: 単位 mm	
TOLERANCES UNLESS OTHERWISE SPECIFIED: 一般公差 10 : ±0.4; 30 >10 : ±0.4; 100 >30 : ±0.4; ANGLE : ±1°0'	
DWN	H Hoshino 31.OCT.'97
CHK	31.OCT.'97
APVD	S Kubouchi 4.NOV.'97
PRODUCT SPEC 製品規格	108-5118
APPLICATION SPEC 取付適用規格	114-5035
WEIGHT	—
AMP	日本エー・エム・ピー株式会社 Kawasaki, Japan
NAME 名称	コンタクト(AMP EI シリーズ コネクタ) CONTACT (AMP EI SERIES CONNECTOR)
SIZE	A
CAGE CODE	00779
DRAWING NO 番号	C-170263-2
CUSTOMER DRAWING	
SCALE 尺度	8-1
SHEET	1 OF 1
REV	F

AMP 1469-35 REV 10/93
fj025072

参考図面