THIS DRAWING IS UNPUBLISHED. RELEASED FOR PUBLICATION -,- .
© COPYRIGHT - BY TYCO ELECTRONICS CORPORATION. ALL INTERNATIONAL RIGHTS RESERVED.

LOC	DIST
J	—

REVISIONS 変更

P	LTR	DESCRIPTION	DATE	DWN	APVD
	E	REVISED	26AUG10	T.T	T.M

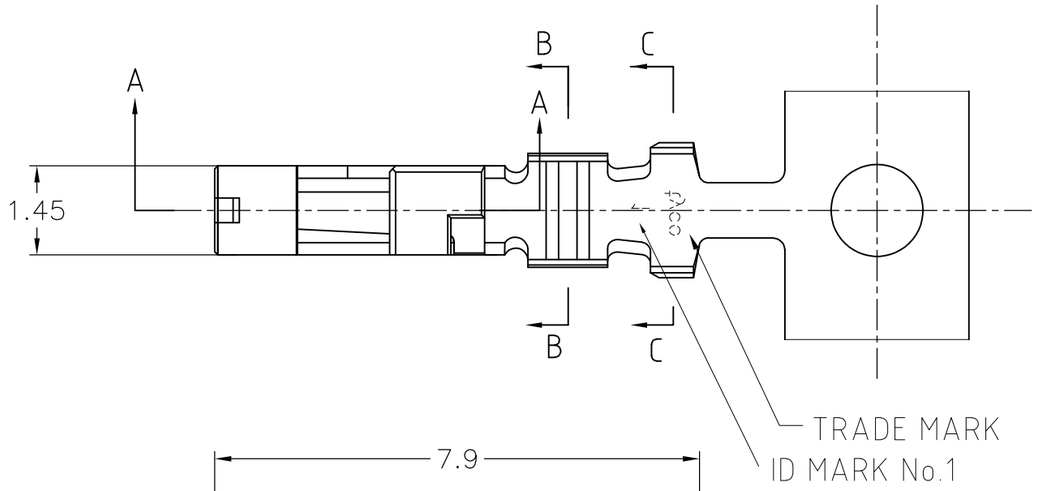

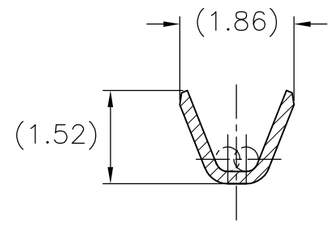

断面 B-B
SECT.

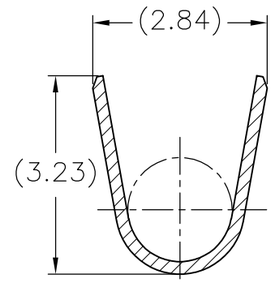

断面 C-C
SECT.

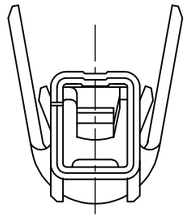

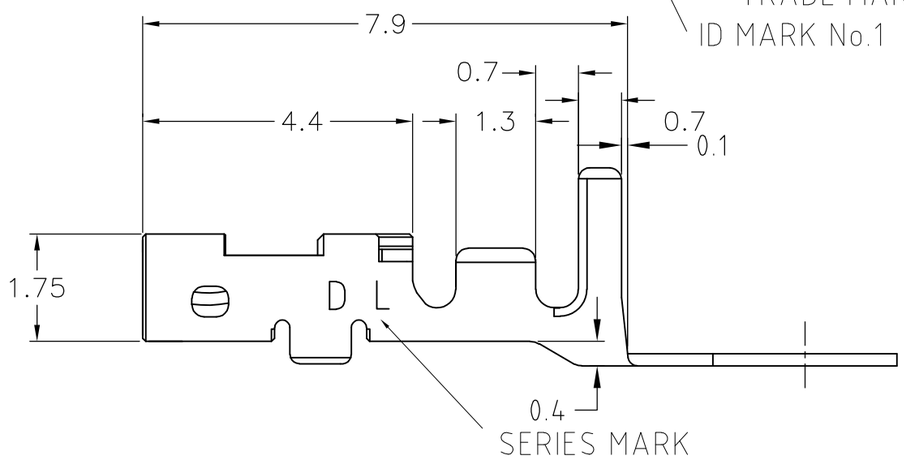

NOTE

1. Application REC-HSG is applied to the product of 2.5mm PITCH or more of DYNAMIC D1000SERIES. 2.0mmPITCH cannot be used

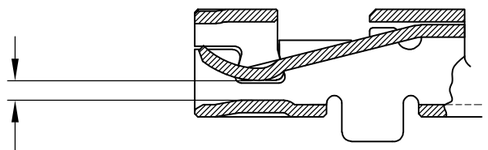

0.5tタブにかん合
MATE WITH 0.5t TAB

断面 A-A
SECT.

AWG#28～#22 0.08～0.38mm²	φ1.08~φ1.9	COPPER ALLOY,FINISH:CONTACT AREA Au 0.38μm MIN,OVER Ni 1.27μm MIN 材料：銅合金,下地：Niめっき1.27μm以上,接点部：金めっき0.38μm以上	1827571-2
WIRE RANGE 導体断面積	INSULATION DIA 被覆外径	MATERIAL 材料	PART No. 型番

THIS DRAWING IS A CONTROLLED DOCUMENT.

DIMENSIONS: 単位： 耗 mm

TOLERANCES UNLESS OTHERWISE SPECIFIED: 一般公差

0 PLC	± 0.3
1 PLC	±
2 PLC	±
3 PLC	±
4 PLC	±
ANGLES	± 3deg

MATERIAL 材料 —

FINISH 仕上 —

DWN	T.KUDO	04MAR2005
CHK	D.MITSUGI	04MAR2005
APVD	D.MITSUGI	04MAR2005
PRODUCT SPEC 製品規格	108-78268	
APPLICATION SPEC 取付適用規格	114-5377	
WEIGHT	—	

Tyco Electronics
Tyco Electronics Corporation
Kawasaki, Japan

NAME 名称: DYNMIC D1000 SERIES REC CONTACT L TYPE REEL

SIZE	CAGE CODE	DRAWING NO 番号	RESTRICTED TO
A3	00779	C-1827571	—

CUSTOMER DRAWING

SCALE 尺度	SHEET	REV
10:1	1 OF 1	E