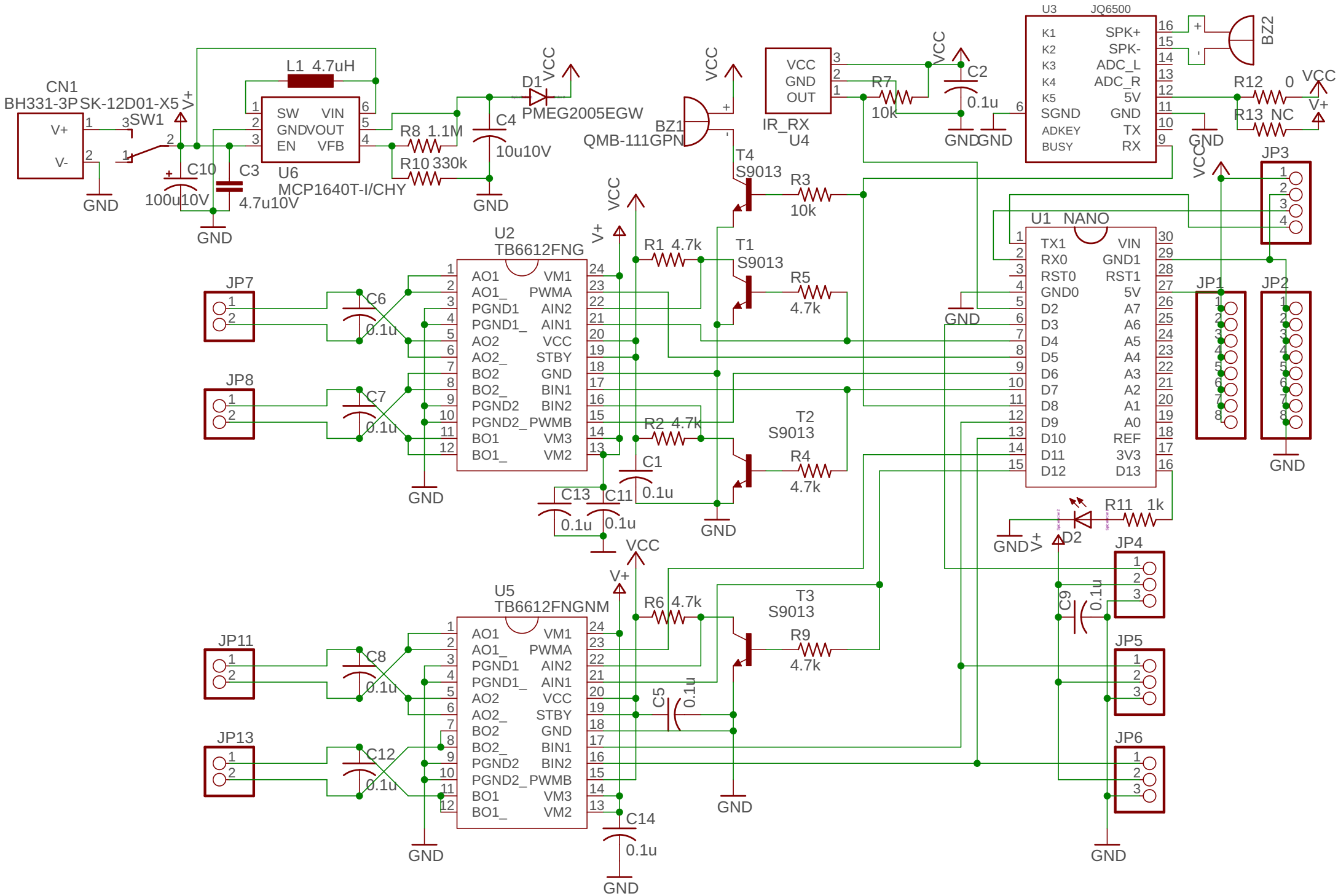
CN1
BH331-3P
SK-12D01-X5
V+
V-
SW1
GND
C10
100u10V
C3
4.7u10V
L1 4.7uH
SW
VIN
GND
VOUT
EN
VFB
U6
MCP1640T-I/CHY
R8 1.1M
R10 330k
C4
10u10V
D1
PMEG2005EGW
VCC
BZ1
QMB-111GPN
IR_RX
U4
VCC
GND
OUT
R7
10k
C2
0.1u
U3
JQ6500
K1
K2
K3
K4
K5
SGND
ADKEY
BUSY
SPK+
SPK-
ADC_L
ADC_R
5V
GND
TX
RX
BZ2
R12 0
R13 NC
JP3
U2
TB6612FNG
AO1
AO1_
PGND1
PGND1_
AO2
AO2_
BO2
BO2_
PGND2
PGND2_
BO1
BO1_
VM1
PWMA
AIN2
AIN1
VCC
STBY
GND
BIN1
BIN2
PWMB
VM3
VM2
JP7
JP8
C6
C7
0.1u
R1 4.7k
R2 4.7k
T1
S9013
T2
S9013
T4
S9013
R3
10k
R5
4.7k
R4
4.7k
C1
C13
C11
U1 NANO
TX1
RX0
RST0
GND0
D2
D3
D4
D5
D6
D7
D8
D9
D10
D11
D12
VIN
GND1
RST1
5V
A7
A6
A5
A4
A3
A2
A1
A0
REF
3V3
D13
JP1
JP2
R11 1k
D2
JP4
C9
JP5
JP6
U5
TB6612FNGNM
JP11
JP13
C8
C12
R6 4.7k
R9
4.7k
T3
S9013
C5
C14

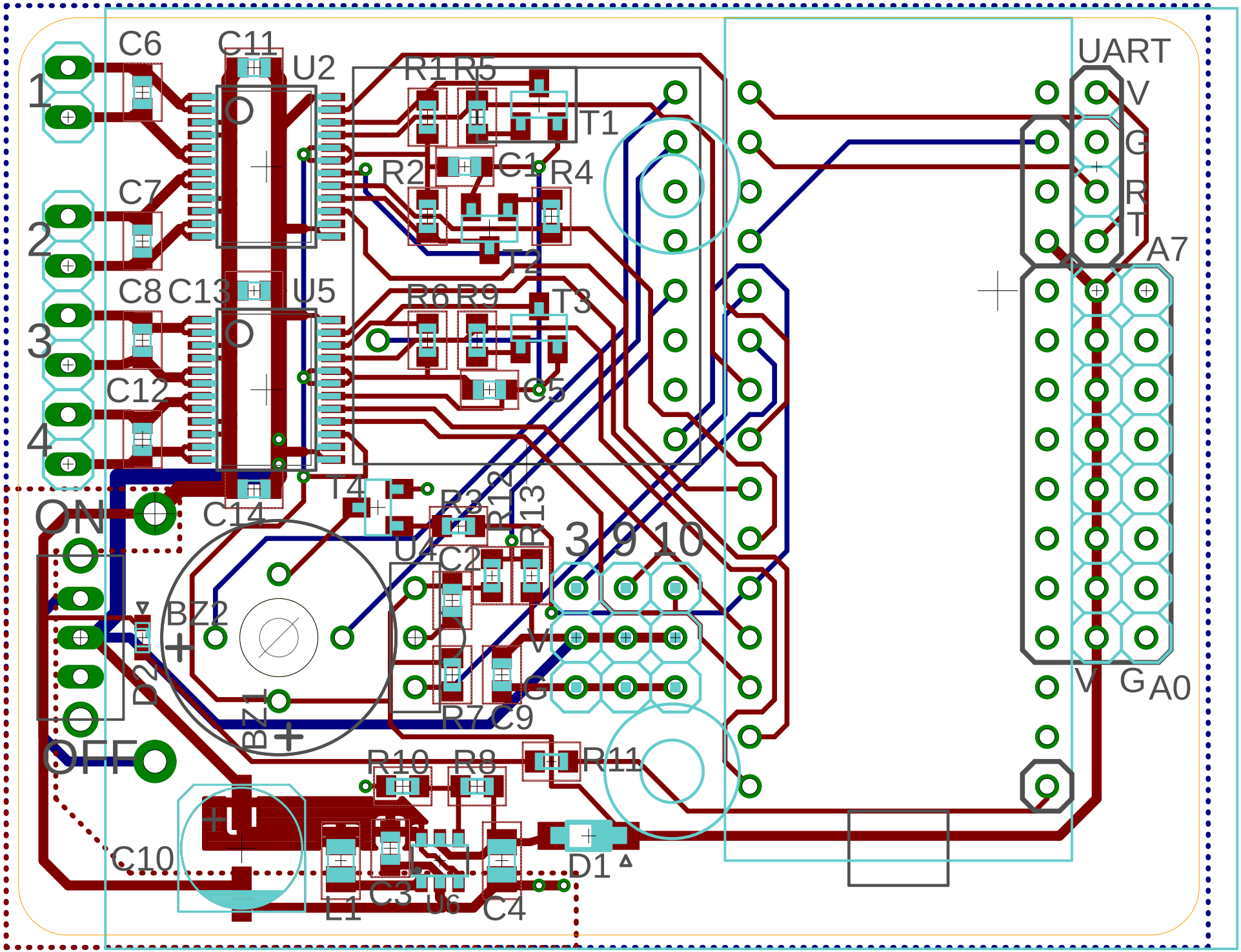

C6
C11
U2
R1
R5
T1
UART
V
G
R
T
A7
1
2
3
4
C7
R2
C1
R4
T2
C8
C13
U5
R6
R9
T3
C12
C5
T4
R3
R12
R13
ON
C14
U4
C2
3
9
10
BZ2
D2
V
G
R7
C9
BZ1
OFF
R10
R8
R11
C10
D1
L1
C3
U6
C4
V
G
A0

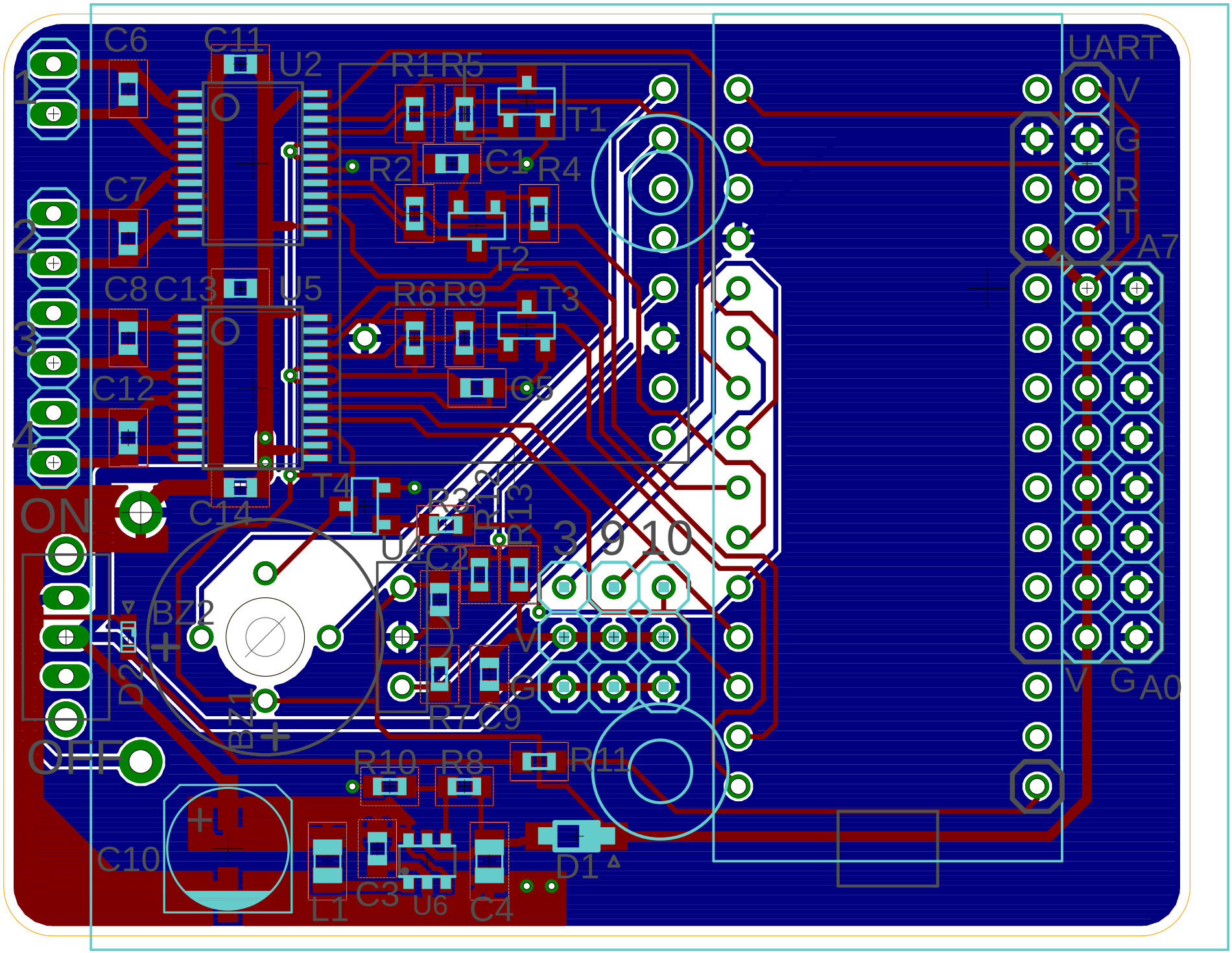
C6
C11
U2
R1
R5
T1
R2
C1
R4
C7
T2
C8
C13
U5
R6
R9
T3
C12
C5
T4
C14
R3
R12
R13
U1
C2
3
9
10
ON
BZ2
D2
BZ1
R7
C9
OFF
R10
R8
R11
C10
L1
C3
U6
C4
D1
UART
V
G
R
T
A7
V
G
A0