THIS COPY IS PROVIDED ON A RESTRICTED BASIS AND IS NOT TO BE USED IN ANY WAY DETRIMENTAL TO THE INTERESTS OF PANDUIT CORP.

PANDUIT PART NUMBER	STUD SIZE	DIMENSIONS - in.					TOOLS
		L ± .03	W ± .01	C ± .02	M ± .03	H ± .01	
EV14-6LFB	#6	.90 (22.86)	.25 (6.35)	.22 (5.59)	.68 (17.27)	.14 (3.56)	*CT-100A CT-600-A (CT-500CH) CT-600-A (CT-550CH) CT-1550 CT-1551 CT-2500 (CT-2550CH)
EV14-8LFB	#8	.97 (24.64)	.29 (7.37)	.25 (6.35)	.73 (18.54)	.16 (4.06)	
EV14-10LFB	#10	.97 (24.64)	.33 (8.38)	.25 (6.35)	.73 (18.54)	.19 (4.83)	

*CT-100A, 167°F (75°C) MAX TEMP. RATING

NOTES:

1. UL LISTED AND CSA CERTIFIED FOR:
   A. #16-14 AWG SOLID OR STRANDED COPPER WIRE
   B. 221°F [105°C] MAX TEMP. RATING
   C. 600V MAX. BLDG WIRE
      (1000 V MAX. IN SIGNS, FIXTURES & LUMINARIES)

2. MATERIAL:
   A. STAMPING - .032" THK, COPPER
      TIN PLATED
   B. HOUSING - VINYL, BLUE
   C. SLEEVE - BRASS, TIN PLATED

3. WIRE STRIP LENGTH: 5/16" $^{+1/32}_{-0}$ [7,9mm $^{+0,8}_{-0}$]

4. SEE WWW.PANDUIT.COM FOR PACKAGE QUANTITIES

5. DIMENSIONS IN BRACKETS ARE IN MILLIMETERS

c UL us
LISTED
587H
E52164

CSA
CERTIFIED
LR31212

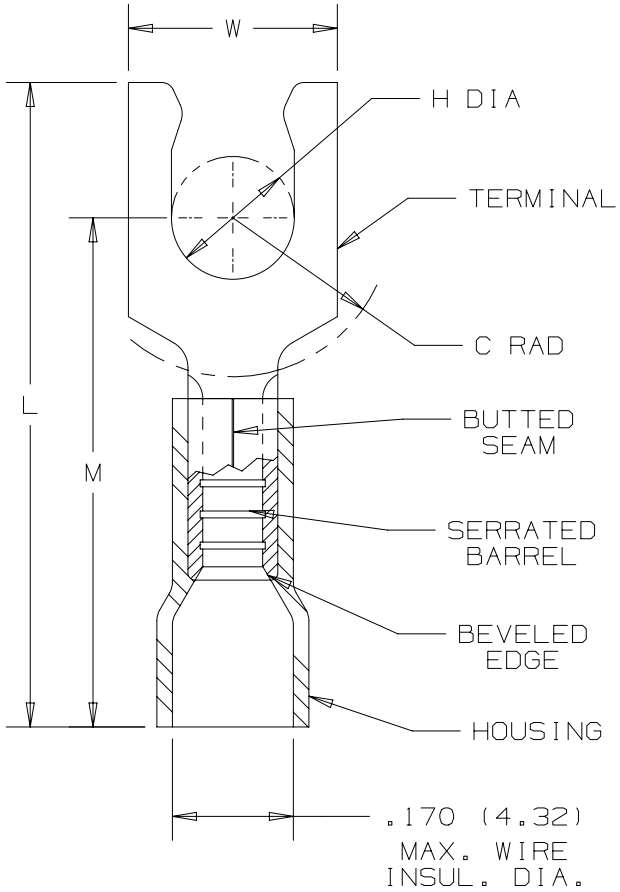

REV	DATE	BY	CHK	APR	DESCRIPTION	ECN
00	2/18	JHNU	TMR	RGB	RELEASED	00123SH

TITLE
STRONGHOLD LOCKING FORK TERMINAL
VINYL INSULATED, BUTTED SEAM #16-14 AWG
CUSTOMER DRAWING

ITEM REVISION NAME: 00123SHU/00
DATASET FILE NAME: 00123SHU/00

PANDUIT

UNLESS OTHERWISE SPECIFIED, DIMENSIONAL TOLERANCES ARE: IN [mm]
.X ± .XXX ±
.XX ± ANGLES ±
THIRD ANGLE PROJECTION

MATERIAL: SEE NOTES

DRAWING NUMBER: SH41296

DRAWN BY	DATE	CHK	SCALE		SIZE
JHNU	2/18	TMR	NONE	SHT 1 OF 1	A

D10100DA/16