SCALA NON IMPEGNATIVA (DO NOT SCALE)
DIMENSIONI IN (DIMENSIONS IN) mm

METRIC

PROIEZIONE EUROPEA (EUROPEAN PROJECTION)

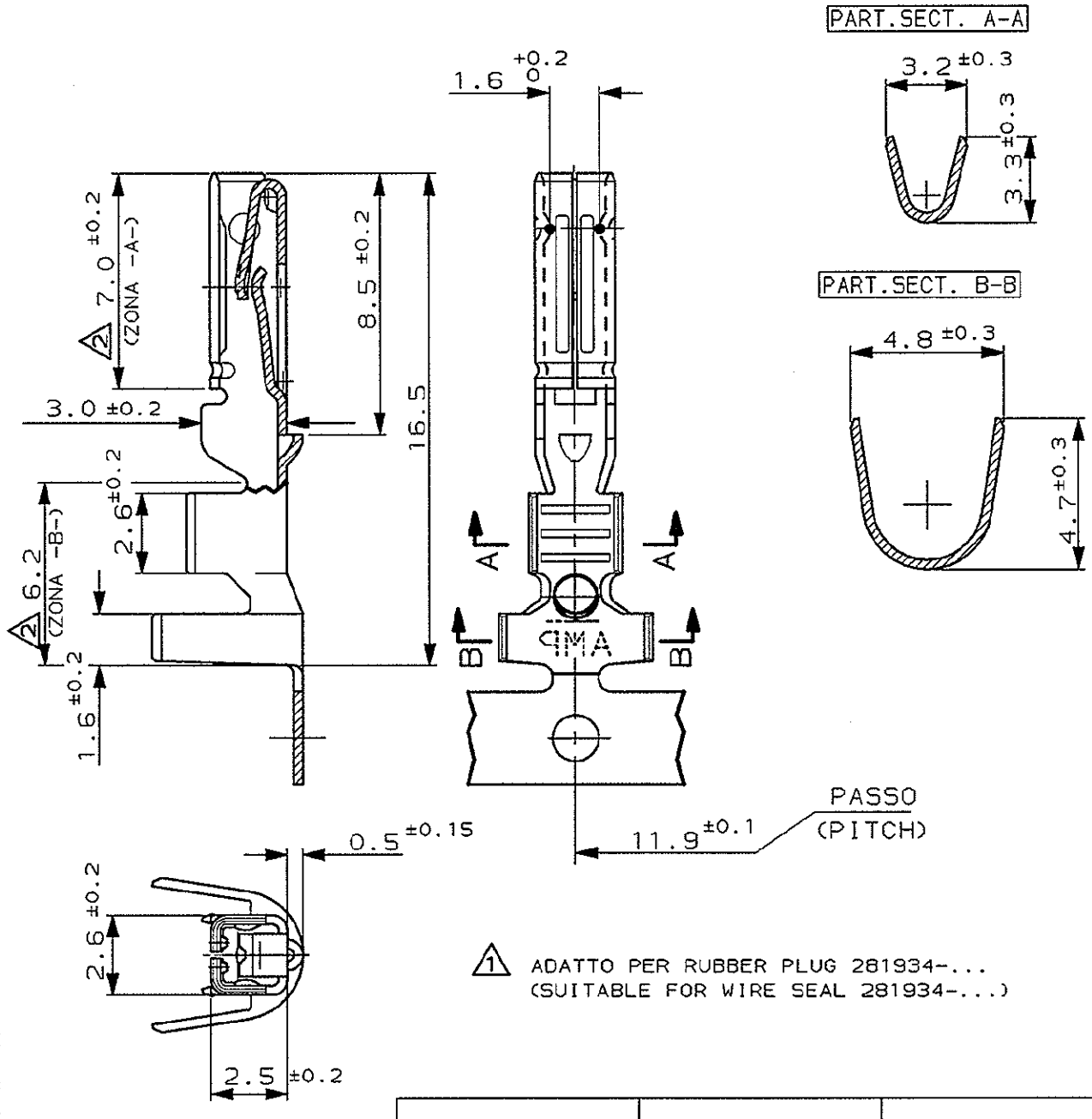

1 ADATTO PER RUBBER PLUG 281934-... (SUITABLE FOR WIRE SEAL 281934-...)

FINITURA / COLORE (FINISH / COLOUR)	MATERIALE (MATERIAL)	NUMERO (PART NUMBER)
PRE-STAGNATO/PRE-TIN	BRONZO FOSF./PH. BRONZE	282110-1

CUSTOMER DRAWING FOR REFERENCE ONLY

DISEGNO PER CLIENTE SOLO PER RIFERIMENTO

THIS DRAWING IS UNPUBLISHED | RELEASE FOR PUBLICATION 1990

© COPYRIGHT 1990 BY AMP INCORPORATED, HARRISBURG, PA. ALL INTERNATIONAL RIGHT RESERVED. AMP PRODUCTS MAY BE COVERED BY U.S. AND FOREIGN PATENT AND/OR PATENT PENDING

REV. (REV. LTR.)	REVISIONI (REVISION RECORD)	DIS. (DR)	DATA (DATE)
D	REVISED FOR ET00-0054-04	M.G.	10 MAR 04
A3	REVISED FOR ET00-0160-99	M.G.	12 MAY 99
A2	UPDATED ET00-0193-98	R.R.	03 JUL 98
A1	REVISED FOR ET00-0072-98	M.P.	07 APR 98
A	MODIFIED WIRE BARREL DIMENSIONS (ET00-0131-94)	C.B.	29 APR 94
4	UP-DATED	C.B.	10 92
3	UP-DATED WIRE RANGE	JUN.	92
2	UP-DATED WIRE RANGE	JUN.	91
1	UP-DATED	NOV.	90

DISTRIBUZIONE (PRINT DIST.)

TOLLERANZE: SE NON DIVERSAMENTE SPECIFICATO (TOLERANCES: UNLESS OTHERWISE SPECIFIED) ± 0.3
ANGOLI (ANGLES) ± 2°

DIS. (DR.) Bassano 9 NOV. 90
CONT. (CHK) Bertini 9 NOV. 90
APP. (APP.) –

DIAM. ISOLANTE (INS. DIA. RANGE) 1
RANGO FILO (WIRE RANGE) 0.75-1.5mm²
SCALA (SCALE) 5:1

AMP ITALIA S.p.A.
Corso F.LLI Cervi, 15
COLLEGNO (TORINO)

DESCRIZIONE (DESCRIPTION) MINI MIC SRS REC. CONTACT

LOC.	SIZE	NUMERO (DWG NO)	REV.	FOGLIO (SHEET)
I	A4	C-282110	D	1 DI (OF) 1

AMP-ITA 7524 - 5/82