THIS DRAWING IS UNPUBLISHED. RELEASED FOR PUBLICATION – ,– .
© COPYRIGHT – BY TYCO ELECTRONICS CORPORATION. ALL INTERNATIONAL RIGHTS RESERVED.

LOC	DIST
G	14

REVISIONS

P	LTR	DESCRIPTION	DATE	DWN	APVD
	T	REVISED PER ECR–10–003079	03MAR10	JR	TM

1 FOR 1.27 [.050] TO 2.08 [.082] WIRE INSULATION DIA

2 TONGUE MATERIAL THK = 0.46±0.05 [.018±.002]

3 APPLIES FROM THE METAL EDGE OF THE BARREL TO THE CENTER OF THE STUD

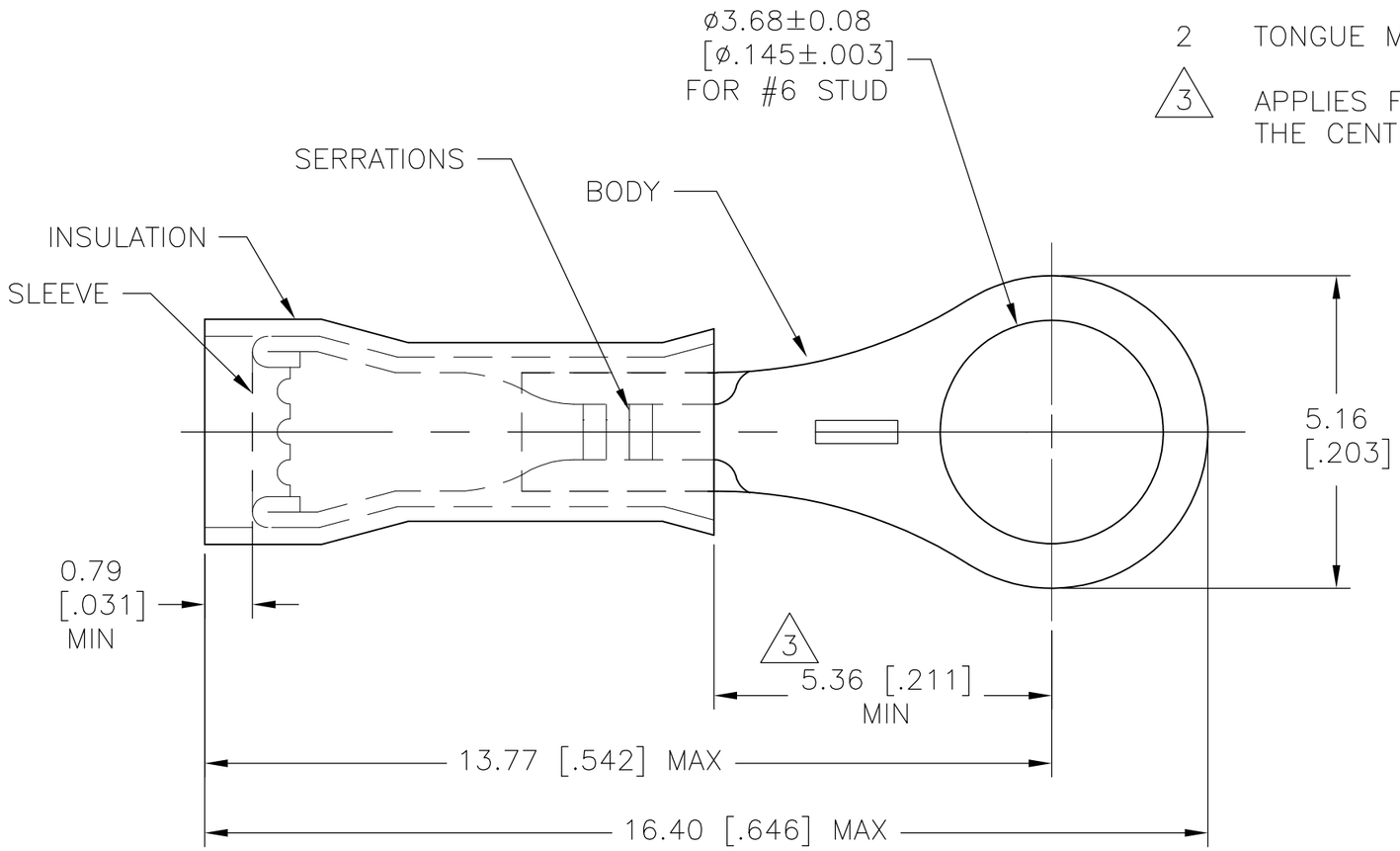

QTY	DESCRIPTION	MATERIAL & FINISH	PART NO
5000	321019 ON TAPE	BODY & SLEEVE: COPPER (ASTM–B152) TIN PL (ASTM–B545)	OBSOLETE ~~2–321019–3~~
1000	WIRE TERMINAL	INSULATION: YELLOW , PVC	321019

THIS DRAWING IS A CONTROLLED DOCUMENT.

DIMENSIONS: mm [INCHES]

TOLERANCES UNLESS OTHERWISE SPECIFIED:
0 PLC ± –
1 PLC ± –
2 PLC ± –
3 PLC ± 0.20 [.008]
4 PLC ± –
ANGLES ± 5°

MATERIAL: SEE TABLE

FINISH: SEE TABLE

DWN JR RUTH 03MAR10
CHK JEFF RUTH 03MAR10
APVD TOM MICHIELUTTI 03MAR10
PRODUCT SPEC —
APPLICATION SPEC —
WEIGHT —

Tyco Electronics
Tyco Electronics Corporation
Harrisburg, PA 17105–3608

NAME: WIRE TERMINAL
PIDG – RING TONGUE
WIRE SIZE: 26 – 22

SIZE	CAGE CODE	DRAWING NO	RESTRICTED TO
A3	00779	C–321019	—

CUSTOMER DRAWING | SCALE 10:1 | SHEET 1 OF 1 | REV T