THIS DRAWING IS UNPUBLISHED. RELEASED FOR PUBLICATION 534998 ,534998
© COPYRIGHT 534998By – ALL RIGHTS RESERVED.

LOC	DIST
AD	00

REVISIONS

P	LTR	DESCRIPTION	DATE	DWN	APVD
	P5	REVISED PER ECO-11-004587	11MAR11	RK	HMR

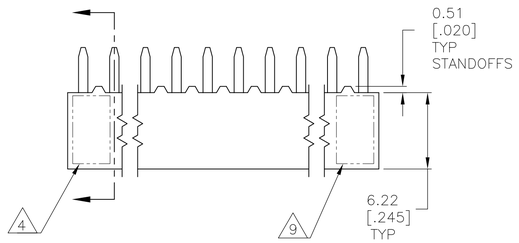

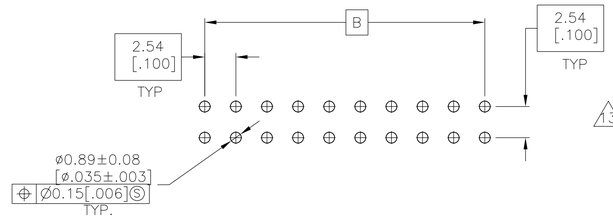

RECOMMENDED PC BOARD HOLE PATTERN
PC BOARD THICKNESS 1.57[.062]

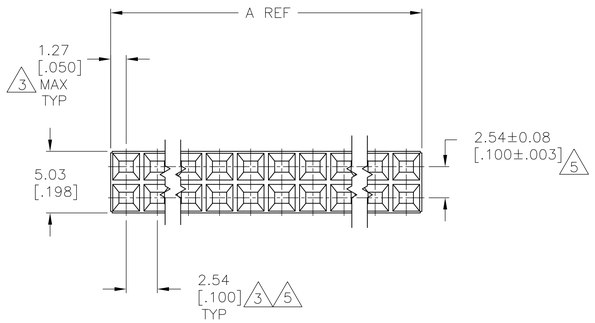

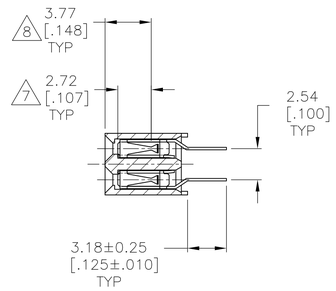

SEE SHEET 2
FOR P/N'S –51 THRU –90

13 2 OBSOLETE	88.90 [3.500]	91.44 [3.600]	72	~~3-534998-6~~
	86.36 [3.400]	88.90 [3.500]	70	~~3-534998-5~~
13 2 SUPERCEDED BY 8-534998-4	83.82 [3.300]	86.36 [3.400]	68	~~3-534998-4~~
13 2 OBSOLETE	81.28 [3.200]	83.82 [3.300]	66	~~3-534998-3~~
	78.74 [3.100]	81.28 [3.200]	64	~~3-534998-2~~
	76.20 [3.000]	78.74 [3.100]	62	~~3-534998-1~~
2	73.66 [2.900]	76.20 [3.000]	60	3-534998-0
13 2 OBSOLETE	71.12 [2.800]	73.66 [2.900]	58	~~2-534998-9~~
	68.58 [2.700]	71.12 [2.800]	56	~~2-534998-8~~
	66.04 [2.600]	68.58 [2.700]	54	~~2-534998-7~~
13 2 SUPERCEDED BY 7-534998-6	63.50 [2.500]	66.04 [2.600]	52	~~2-534998-6~~
2	60.96 [2.400]	63.50 [2.500]	50	2-534998-5
13 2 OBSOLETE	58.42 [2.300]	60.96 [2.400]	48	~~2-534998-4~~
	55.88 [2.200]	58.42 [2.300]	46	~~2-534998-3~~
2	53.34 [2.100]	55.88 [2.200]	44	2-534998-2
13 OBSOLETE	50.80 [2.000]	53.34 [2.100]	42	~~2-534998-1~~
2	48.26 [1.900]	50.80 [2.000]	40	2-534998-0
2	45.72 [1.800]	48.26 [1.900]	38	1-534998-9
2	43.18 [1.700]	45.72 [1.800]	36	1-534998-8
2	40.64 [1.600]	43.18 [1.700]	34	1-534998-7
2	38.10 [1.500]	40.64 [1.600]	32	1-534998-6
2	35.56 [1.400]	38.10 [1.500]	30	1-534998-5
2	33.02 [1.300]	35.56 [1.400]	28	1-534998-4
2	30.48 [1.200]	33.02 [1.300]	26	1-534998-3
2	27.94 [1.100]	30.48 [1.200]	24	1-534998-2
2	25.40 [1.000]	27.94 [1.100]	22	1-534998-1
2	22.86 [.900]	25.40 [1.000]	20	1-534998-0
2	20.32 [.800]	22.86 [.900]	18	534998-9
2	17.78 [.700]	20.32 [.800]	16	534998-8
2	15.24 [.600]	17.78 [.700]	14	534998-7
2	12.70 [.500]	15.24 [.600]	12	534998-6
2 10	10.16 [.400]	12.70 [.500]	10	534998-5
2 10	7.62 [.300]	10.16 [.400]	8	534998-4
2 10	5.08 [.200]	7.62 [.300]	6	534998-3
2 10	2.54 [.100]	5.08 [.200]	4	534998-2
2 10	–	2.54 [.100]	2	6 534998-1
	B	A	NO OF POSN	PART NUMBER

13 2 SUPERCEDED BY 9-534998-0	99.06 [3.900]	101.60 [4.000]	80	~~4-534998-0~~
13 2 OBSOLETE	96.52 [3.800]	99.06 [3.900]	78	~~3-534998-9~~
	93.98 [3.700]	96.52 [3.800]	76	~~3-534998-8~~
	91.44 [3.600]	93.98 [3.700]	74	~~3-534998-7~~
	B	A	NO OF POSN	PART NUMBER

1. HOUSING: FLAME RETARDANT, GLASS FILLED, THERMOPLASTIC, COLOR: BLACK.
   CONTACT: PHOSPHOR BRONZE
2. CONTACT: DUPLEX PLATED 0.76μm[.000030] GOLD IN CONTACT AREA, 3.81–7.62μm[.000150–.000300] BRIGHT TIN–LEAD ON LEADS, ALL OVER 1.27μm[.000050] NICKEL
3. THESE DIMENSIONS PERTAIN TO CAVITIY CENTERLINES ONLY – NOT TO CONTACT LOCATIONS
4. PART NUMBER AND DATE CODE ARE MARKED IN APPROXIMATE LOCATION SHOWN.
5. TOLERANCE IS NON–CUMULATIVE.
6. 2 POSITION DATE CODE IS MARKED OPPOSITE SIDE OF TE CONNECTIVITY LOGO.
7. POINT–OF–MEASUREMENT DIMENSION FOR PLATING THICKNESS (INSIDE CONTACT BEAM).
8. POINT–OF–CONTACT DIMENSION.
9. TE CONNECTIVITY TRADEMARK AND CSA LOGO ARE MOLDED INTO HOUSING, THIS LOCATION.
10. NO PART NUMBER MARKING REQUIRED FOR THIS PART.
11. CONTACT: DUPLEX PLATED 0.76μm[.000030] GOLD IN CONTACT AREA, 3.81–7.62μm[.000150–.000300] MATTE TIN ON LEADS, ALL OVER 1.27μm[.000050] NICKEL
12. ROHS 2002/95/EC COMPLIANT
13. OBSOLETE PARTS: OBSOLETE CIS STREAMLINING PER D.RENAUD/D.SINISI

THIS DRAWING IS A CONTROLLED DOCUMENT.

DIMENSIONS: mm [INCHES]

TOLERANCES UNLESS OTHERWISE SPECIFIED:
0 PLC ± –
1 PLC ± –
2 PLC ± 0.13[.005]
3 PLC ± –
4 PLC ± –
ANGLES ± –

MATERIAL 1
FINISH 2

DWN M.BINNER 06NOV02
CHK J.OLSON 06NOV02
APVD J.OLSON 06NOV02
PRODUCT SPEC 108-25022
APPLICATION SPEC 114-25018
WEIGHT –

TE Connectivity

NAME RECEPTACLE ASSEMBLY, MOD IV, DOUBLE ROW, DUAL ENTRY, .100X.100CL, VERTICAL MOUNT, AMPMODU

SIZE	CAGE CODE	DRAWING NO	RESTRICTED TO
A1	00779	C-534998	–

CUSTOMER DRAWING SCALE 4:1 SHEET 1 OF 2 REV P5

THIS DRAWING IS UNPUBLISHED. RELEASED FOR PUBLICATION 534998 ,534998
© COPYRIGHT 534998By – ALL RIGHTS RESERVED.

LOC	DIST
AD	00

REVISIONS

P	LTR	DESCRIPTION	DATE	DWN	APVD
	–	SEE SHEET 1	–	–	–

13 12 11 OBSOLETE	88.90 [3.500]	91.44 [3.600]	72	~~8–534998–6~~
	86.36 [3.400]	88.90 [3.500]	70	~~8–534998–5~~
12 11	83.82 [3.300]	86.36 [3.400]	68	8–534998–4
13 12 11 OBSOLETE	81.28 [3.200]	83.82 [3.300]	66	~~8–534998–3~~
	78.74 [3.100]	81.28 [3.200]	64	~~8–534998–2~~
	76.20 [3.000]	78.74 [3.100]	62	~~8–534998–1~~
12 11	73.66 [2.900]	76.20 [3.000]	60	8–534998–0
13 12 11 OBSOLETE	71.12 [2.800]	73.66 [2.900]	58	~~7–534998–9~~
	68.58 [2.700]	71.12 [2.800]	56	~~7–534998–8~~
	66.04 [2.600]	68.58 [2.700]	54	~~7–534998–7~~
12 11	63.50 [2.500]	66.04 [2.600]	52	7–534998–6
12 11	60.96 [2.400]	63.50 [2.500]	50	7–534998–5
13 12 11 OBSOLETE	58.42 [2.300]	60.96 [2.400]	48	~~7–534998–4~~
	55.88 [2.200]	58.42 [2.300]	46	~~7–534998–3~~
12 11	53.34 [2.100]	55.88 [2.200]	44	7–534998–2
13 12 11 OBSOLETE	50.80 [2.000]	53.34 [2.100]	42	~~7–534998–1~~
12 11	48.26 [1.900]	50.80 [2.000]	40	7–534998–0
12 11	45.72 [1.800]	48.26 [1.900]	38	6–534998–9
12 11	43.18 [1.700]	45.72 [1.800]	36	6–534998–8
12 11	40.64 [1.600]	43.18 [1.700]	34	6–534998–7
12 11	38.10 [1.500]	40.64 [1.600]	32	6–534998–6
12 11	35.56 [1.400]	38.10 [1.500]	30	6–534998–5
12 11	33.02 [1.300]	35.56 [1.400]	28	6–534998–4
12 11	30.48 [1.200]	33.02 [1.300]	26	6–534998–3
12 11	27.94 [1.100]	30.48 [1.200]	24	6–534998–2
13 12 11 OBSOLETE	25.40 [1.000]	27.94 [1.100]	22	~~6–534998–1~~
12 11	22.86 [.900]	25.40 [1.000]	20	6–534998–0
12 11	20.32 [.800]	22.86 [.900]	18	5–534998–9
12 11	17.78 [.700]	20.32 [.800]	16	5–534998–8
12 11	15.24 [.600]	17.78 [.700]	14	5–534998–7
12 11	12.70 [.500]	15.24 [.600]	12	5–534998–6
12 11 10	10.16 [.400]	12.70 [.500]	10	5–534998–5
12 11 10	7.62 [.300]	10.16 [.400]	8	5–534998–4
12 11 10	5.08 [.200]	7.62 [.300]	6	5–534998–3
12 11 10	2.54 [.100]	5.08 [.200]	4	5–534998–2
12 11 10	–	2.54 [.100]	2	6 5–534998–1
	B	A	NO OF POSN	PART NUMBER

12 11	99.06 [3.900]	101.60 [4.000]	80	9–534998–0
13 12 11 OBSOLETE	96.52 [3.800]	99.06 [3.900]	78	~~8–534998–9~~
	93.98 [3.700]	96.52 [3.800]	76	~~8–534998–8~~
	91.44 [3.600]	93.98 [3.700]	74	~~8–534998–7~~
	B	A	NO OF POSN	PART NUMBER

THIS DRAWING IS A CONTROLLED DOCUMENT.

DIMENSIONS: mm [INCHES]

TOLERANCES, UNLESS OTHERWISE SPECIFIED:
0 PLC ± –
1 PLC ± –
2 PLC ± 0.13[.005]
3 PLC ± –
4 PLC ± –
ANGLES ± –

MATERIAL 1 FINISH 2

DWN M.BINNER 06NOV02
CHK J.OLSON 06NOV02
APVD J.OLSON 06NOV02
PRODUCT SPEC 108–25022
APPLICATION SPEC 114–25018
WEIGHT –

TE Connectivity

NAME RECEPTACLE ASSEMBLY, MOD IV, DOUBLE ROW, DUAL ENTRY, .100X.100CL, VERTICAL MOUNT, AMPMODU

SIZE	CAGE CODE	DRAWING NO	RESTRICTED TO
A1	00779	C–534998	–

CUSTOMER DRAWING SCALE 4:1 SHEET 2 OF 2 REV P5

4805 (3/11)