Wide Input Voltage Range, Save Mounting Space !

10 Watt BTD Series

RoHS Compliance

Isolated
Low Isolation Cpapacitance

The Fifth Generation, Ultra Small Size, Isolated Type DC-DC Conv

Input: 5V, 12V, 24V, 48V Output: 3.3V, 5V, 12V, 15V, ±12V, ±15V

- Adjustable Output Voltage
- Remote ON/OFF Control
- Dual Power Supply Usable As Single Power Supply
- Isolation Voltage AC500V
- Over-Current Protection
- Under Voltage Lock Out
- No Electrolytic Capacitor, No Tantalum Capacitor
- Metallic Shield Cover
- Halogen-Free PCB Used
- Between Primary and Secondary isolation capacitance is approx. 1100pF.
- Operating Temp Range -40°C to +85°C (Temp Derating Required)
- RoHS Compliance
- UL/C-UL Recognition

Models BTD Series	Input V Vdc	Output V Vdc	Output I mA	Line Reg. %(max.)	Load Reg. %(max.)	Ripple Noise mVpp(typ.)	Efficiency %(typ.)
BTD05-03S250X	4.5-9	3.3	0-2500	0.6	1.2	40	84
BTD05-05S200X		5	0-2000	0.4	0.8		84
BTD05-12S80X		12(15)	0-800(640)	0.35	0.85	30	84
BTD05-12W40X		±12(±15)	0-400(320)	0.7	5		83
BTD12-03S250X	9-18	3.3	0-2500	0.6	1.2	40	84
BTD12-05S200X		5	0-2000	0.4	0.8		86
BTD12-12S100X		12(15)	0-1000(800)	0.35	0.85	30	88
BTD12-12W45X		±12(±15)	0-450(360)	0.7	5		86
BTD24-03S250X	18-36	3.3	0-2500	0.6	1.2	40	84
BTD24-05S200X		5	0-2000	0.4	0.8		86
BTD24-12S100X		12(15)	0-1000(800)	0.35	0.85	30	87
BTD24-12W45X		±12(±15)	0-450(360)	0.7	5		86
BTD48-03S250X	36-76	3.3	0-2500	0.6	1.2	40	84
BTD48-05S200X		5	0-2000	0.4	0.8		86
BTD48-12S100X		12(15)	0-1000(800)	0.35	0.85	30	88
BTD48-12W45X		±12(±15)	0-450(360)	0.7	5		86

Note 1: Add the model type suffix where the **X** is where D : DIP type, S : SMD type
Ex.) DIP type: BTD05-03S250D, SMD type: BTD05-03S250S

Note 2: The output voltage inside ( ) is when Vadj. and -Vout is short. The adjustable range for output voltage is: 3.15-3.6V (3.3V products), 4.75-6V (5V products), 11.4-15V (12V products) respectively.

Note 3: The output current inside ( ) is when output voltage is set at maximum.

- Note!
This catalogue is an outline of the products. When designing, be sure to refer to the data sheets.

<Outline> (DIP type)

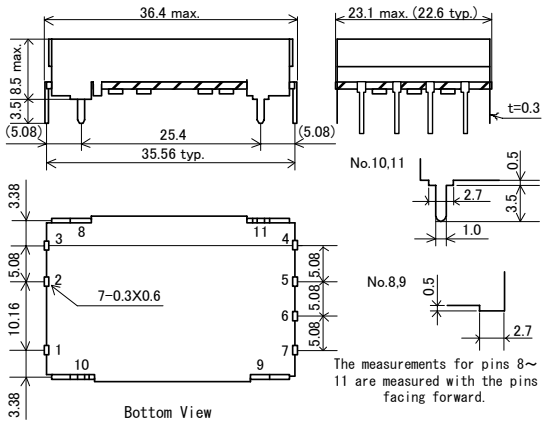

BTD-S Series

Pin	Function
1	+Vin
2	ON/OFF
3	-Vin
4	NC
5	-Vout
6	Vadj
7	+Vout
8, 9	Stand Off
10,11	Case Connection

*8-11pin are only available for DIP type.

BTD-W Series

Pin	Function
1	+Vin
2	ON/OFF
3	-Vin
4	-Vout
5	Common
6	Vadj
7	+Vout
8, 9	Stand Off
10,11	Case Connection

*8-11pin are only available for DIP type.

<Outline> (SMD type)

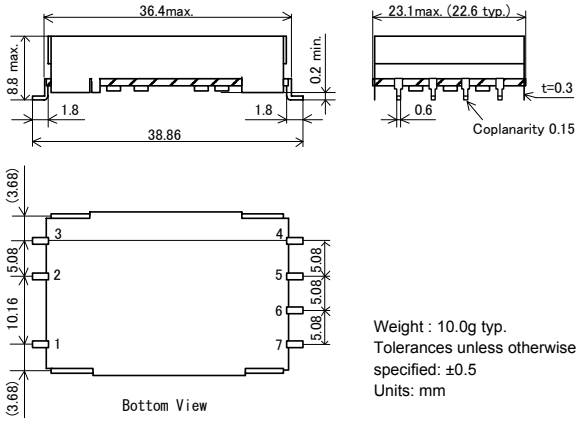

Weight : 10.0g typ.
Tolerances unless otherwise specified: ±0.5
Units: mm

<Standard Connection Diagram>

BTD-S Series (3.3V,5V,12V,15V)

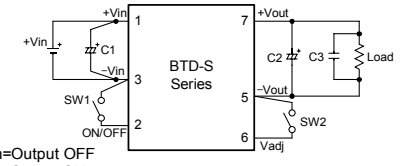

SW1
Open=Output OFF
Short=Output ON

SW2:
Open: Vout = 3.3V, 5V, 12V
Short: Vout = 3.3V→3.6V
= 5V→6V
= 12V→15V

C1=47μF / C2=47μF / C3=0.47μF

BTD-W Series (±12V,±15V)

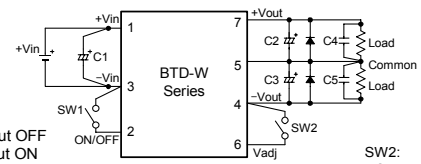

SW1
Open=Output OFF
Short=Output ON

SW2:
Open: Vout = ±12V
Short: Vout = ±15V

C1=47μF / C2,C3=47μF / C4,C5=0.47μF

- External capacitors have a limited capacity. Please refer to the data sheet.
- Rated output voltage applies, with 6pin open. Output voltage is adjustable as shown above with Vadj and -Vout short.