THIS COPY IS PROVIDED ON A RESTRICTED BASIS AND IS NOT TO BE USED IN ANY WAY DETRIMENTAL TO THE INTERESTS OF PANDUIT CORP.

PANDUIT PART #	WIRE RANGE AWG [mm²]	TAB SIZE INCH [mm]	HOUSING COLOR	DIMENSIONS in. [mm]	
				L ± .03 [0,8]	MAX WIRE INSULATION DIA.
EDV18-250M	#22-18 [0,5-1,0]	.250 X .032 [6,3 X 0,8]	RED	.98 [24,9]	.154 [3,91]
EDV14-250M	#16-14 [1,5-2,5]		BLUE	.96 [24,3]	.180 [4,57]

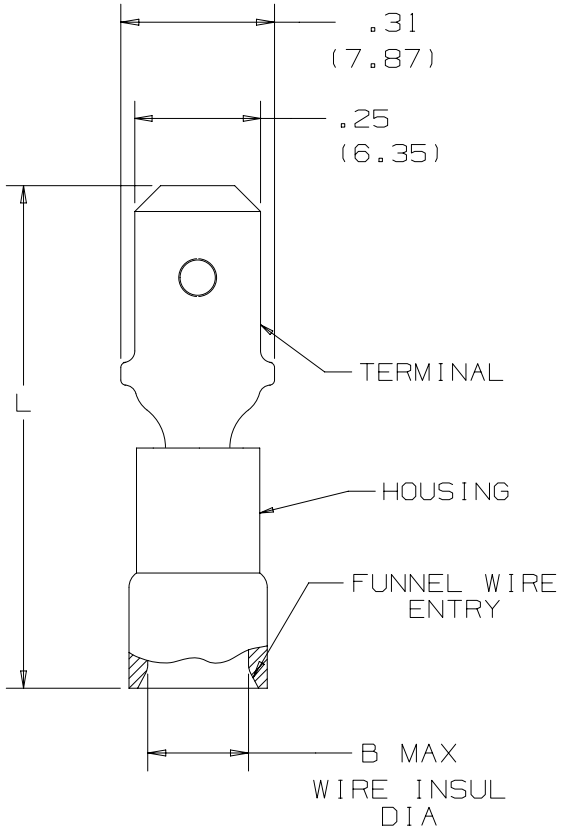

NOTES:

1. CSA CERTIFIED FOR:
   A. STRANDED COPPER WIRE ONLY
   B. 221°F (105°C) MAX TEMP RATING
   C. 600V MAX VOLTAGE

2. MATERIAL:
   A. STAMPING: .031" (0.8) THK COPPER, NICKEL PLATED
   B. HOUSING: VINYL

3. INSTALLATION TOOLS: CT-500, CT-550, CT-1550, CT-1551

4. WIRE STRIP LENGTH 9/32" $^{+1/32}_{-0}$ [7,1mm $^{+0.8}_{-0}$]

5. SEE WWW.PANDUIT.COM FOR PACKAGE QUANTITIES INDICATED BY PART NUMBER SUFFIX

6. DIMENSIONS IN BRACKETS ARE METRIC EQUIVALENT

CERTIFIED
LR31212

TITLE
STRONGHOLD MALE DISCONNECT (250 SERIES)
VINYL INSULATED, BRAZED SEAM #22-14 AWG
CUSTOMER DRAWING

ITEM REVISION NAME: 00123SHZ/00
DATASET FILE NAME: 00123SHZ/00

PANDUIT

UNLESS OTHERWISE SPECIFIED, DIMENSIONAL TOLERANCES ARE: IN [mm]
.X ± .1 [2.54] .XXX ± .005 [.127]
.XX ± .01 [.25] ANGLES ± 5 °
THIRD ANGLE PROJECTION

MATERIAL: SEE NOTES

DRAWING NUMBER: SH41405

DRAWN BY	DATE	CHK	SCALE	SIZE
JHNU	2/18	TMR	NTS	A

SHT 1 OF 1

REV	DATE	BY	CHK	APR	DESCRIPTION	ECN
00	2/18	JHNU	TMR	RGB	RELEASED	00123SH

D10100DA/20