REV.	DATE	NAME	NOTE:
	06,11,27		

MODE NO:	
MATERIAL SIZE	
FINISH	
NOTE:	

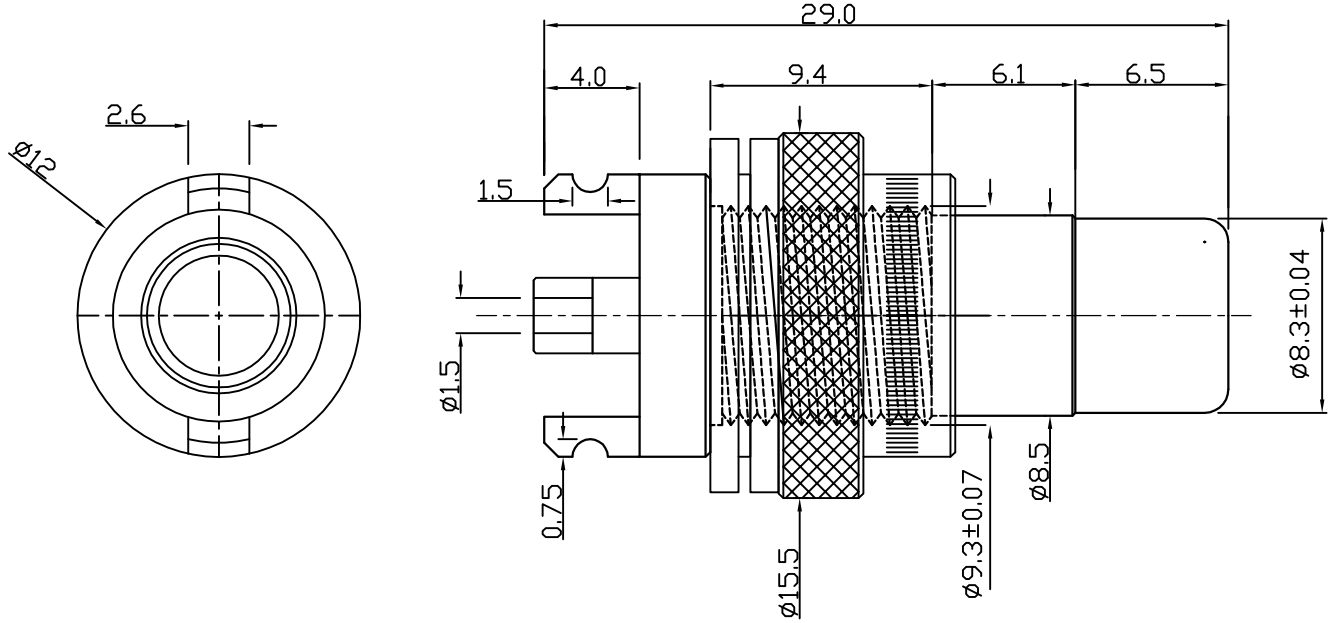

Amtrans	DRAW		UNIT	mm	SCALE	3:1	DATE	06,11,27	DRAW NO. RJ-232	TOLERANCE	MATERIAL
	CHECK		Amtrans corporation							X. ±0.3	
	REV.								TITLE	.X ±0.2	REMARKS
										.XX ±0.1	