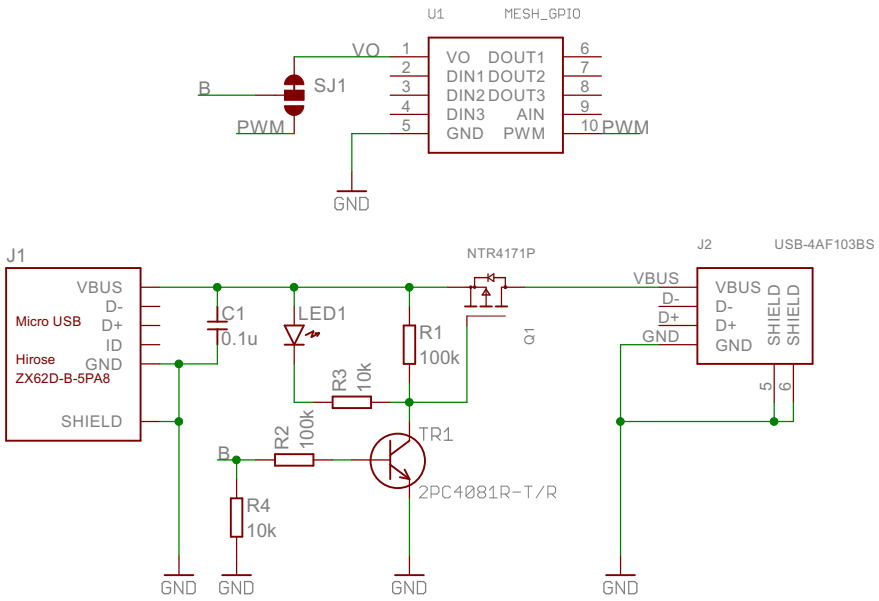

	Switch Science, Inc.
	mesh_gpio_USBpower
	2017/09/21 14:41:27
	Sheet: 1/1