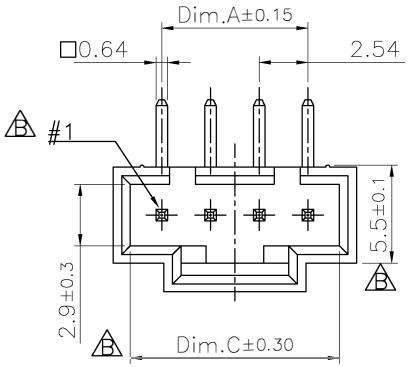

04~18P

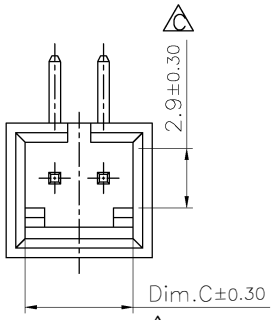

2P

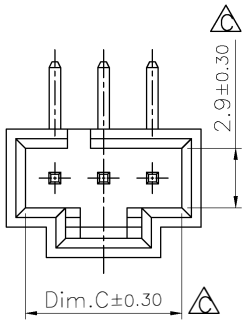

3P

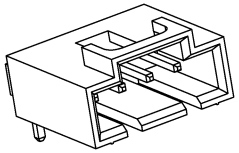

Specifications:
Current Rating:2.5A AC/DC
Voltage Rating:250V AC/DC
Contact Resistance:15m ohm. Max.
Insulation Resistance:1000M ohm. Min.
Withstanding Voltage:600V AC/Minute
Operating Temperature Range: −25°C To +85°C

Material And Finish:
Insulator:PBT (UL94V−0)
Insulator Color:Black
Terminal:Brass
Plating:Gold/Tin Plated C

How To Order
3750R−XXX
- Blank Gold Plated
- T:Tin Plated C
- No. of Contacts
- R: Right Angle

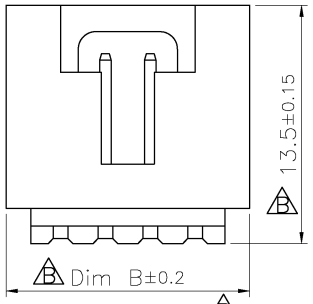

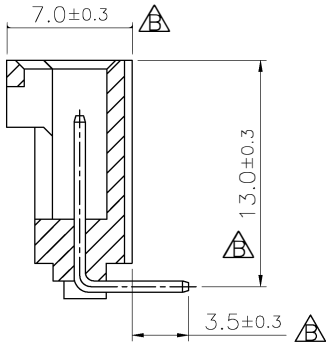

Circuits	Dim.A	Dim.B	Dim.C	Circuits	Dim.A	Dim.B	Dim.C
2	2.54	7.62	5.72	11	25.40	30.48	28.58
3	5.08	10.16	8.26	12	27.94	33.02	31.12
4	7.62	12.70	10.80	13	30.48	35.56	33.66
5	10.16	15.24	13.34	14	33.02	38.10	36.20
6	12.70	17.78	15.88	15	35.56	40.64	38.74
7	15.24	20.32	18.42	16	38.10	43.18	41.28
8	17.78	22.86	20.96	17	40.64	45.72	43.82
9	20.32	25.40	23.50	18	43.18	48.26	46.36
10	22.86	27.94	26.04				

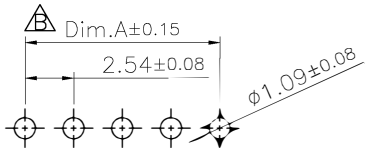

P.C.B Layout

RoHS Compliant

REV	DATE	FILE	BY
F			
E			
D			
C	02−MAR−2021	C Add Tin Plated	Lisy Liu
B	08−APR−2019	Modify Dim	Jamie Wang
A	26−OCT−2009		Allen

DRAWN: Allen
CHECKED: Jerry Chen
APPROVAL: Mike Wu

GENERAL TOLERANCE:
.X=±0.25
.XX=±0.20

UNIT: MM
SCALE:
SHEET: 1/2
PROJECTION:

Neltron Connectors **Neltron Industrial Co., Ltd.**

DESCRIPTION: 2.54mm Pocket Header R/A Single Row

PART NO: 3750R−XXX C

SIZE **A4**

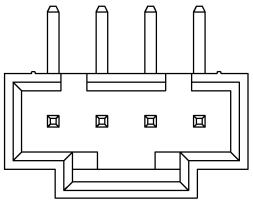

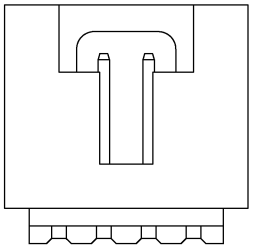

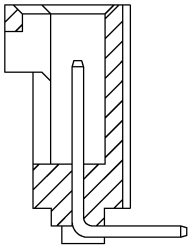

Note:
1.Dimension:
Carton Size:XXX*XXX*XXX(mm)
2,Quantity:
XXPCS/Bag
XXBag/Carton

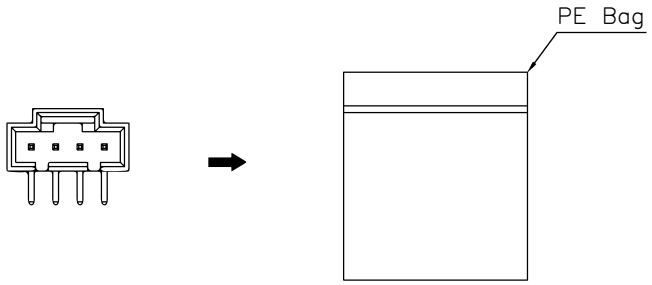

Pin.	Pcs/Bag	Pin.	Pcs/Bag
02	1000	11	500
03	1000	12	250
04	1000	13	250
05	1000	14	250
06	500	15	250
07	500	16	250
08	500	17	250
09	500	18	250
10	500		

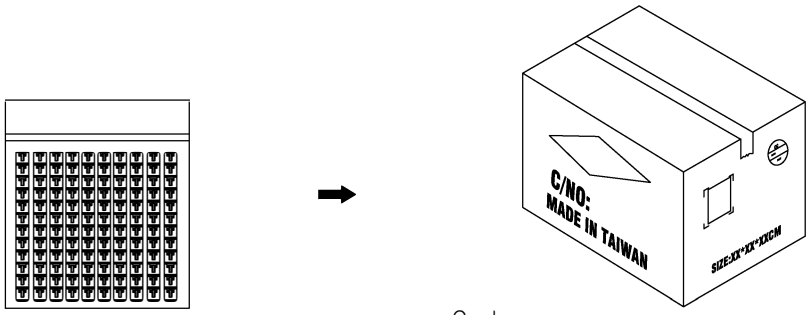

Carton

RoHS Compliant

REV	DATE	FILE	BY
F			
E			
D			
C	02-MAR-2021	△C Add Tin Plated	Lisy Liu
B	08-APR-2019	Modify Dim	Jamie Wang
A	26-OCT-2009		Allen

DRAWN: Allen
CHECKED: Jerry Chen
APPROVAL: Mike Wu

GENERAL TOLERANCE:
.X=±0.20
.XX=±0.15

UNIT: MM
SCALE:
SHEET: 2/2
PROJECTION:

Neltron Connectors **Neltron Industrial Co., Ltd.**

DESCRIPTION: 2.54mm Pocket Header R/A Single Row Packing List

PART NO: 3750R-XXX △C

SIZE **A4**