Device Modeling Report

COMPONENTS: Digital transistor (BRT)
PART NUMBER: RN1964FS
MANUFACTURER: TOSHIBA

Bee Technologies Inc.

All Rights Reserved Copyright (C) Bee Technologies Inc. 2010

DIGITAL TRANSISTOR MODEL

PSpice model parameter	Model description
IS	Saturation Current
BF	Ideal Maximum Forward Beta
NF	Forward Current Emission Coefficient
VAF	Forward Early Voltage
IKF	Forward Beta Roll-off Knee Current
ISE	Non-ideal Base-Emitter Diode Saturation Current
NE	Non-ideal Base-Emitter Diode Emission Coefficient
BR	Ideal Maximum Reverse Beta
NR	Reverse Emission Coefficient
VAR	Reverse Early Voltage
IKR	Reverse Beta Roll-off Knee Current
ISC	Non-ideal Base-Collector Diode Saturation Current
NC	Non-ideal Base-Collector Diode Emission Coefficient
NK	Forward Beta Roll-off Slope Exponent
RE	Emitter Resistance
RB	Base Resistance
RC	Series Collector Resistance
CJE	Zero-bias Emitter-Base Junction Capacitance
VJE	Emitter-Base Junction Potential
MJE	Emitter-Base Junction Grading Coefficient
CJC	Zero-bias Collector-Base Junction Capacitance
VJC	Collector-base Junction Potential
MJC	Collector-base Junction Grading Coefficient
FC	Coefficient for Onset of Forward-bias Depletion Capacitance
TF	Forward Transit Time
XTF	Coefficient for TF Dependency on Vce
VTF	Voltage for TF Dependency on Vce
ITF	Current for TF Dependency on Ic
PTF	Excess Phase at f=1/2pi*TF
TR	Reverse Transit Time
EG	Activation Energy
XTB	Forward Beta Temperature Coefficient
XTI	Temperature Coefficient for IS

All Rights Reserved Copyright (C) Bee Technologies Inc. 2010

I_C-$V_{I(ON)}$ Characteristics

Circuit simulation result

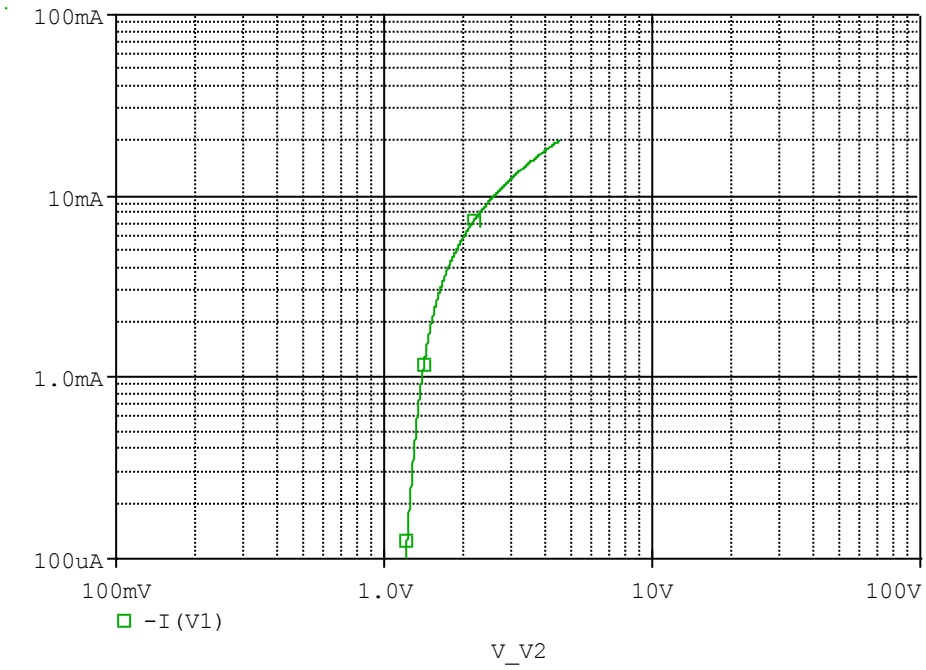

Evaluation circuit

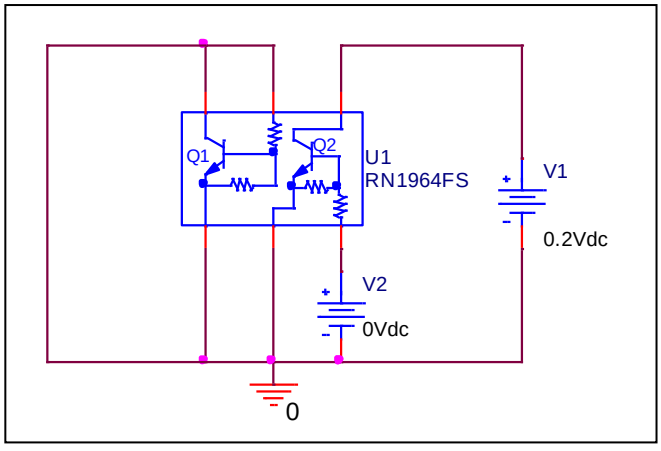

All Rights Reserved Copyright (C) Bee Technologies Inc. 2010

Comparison Graph

Circuit Simulation Result

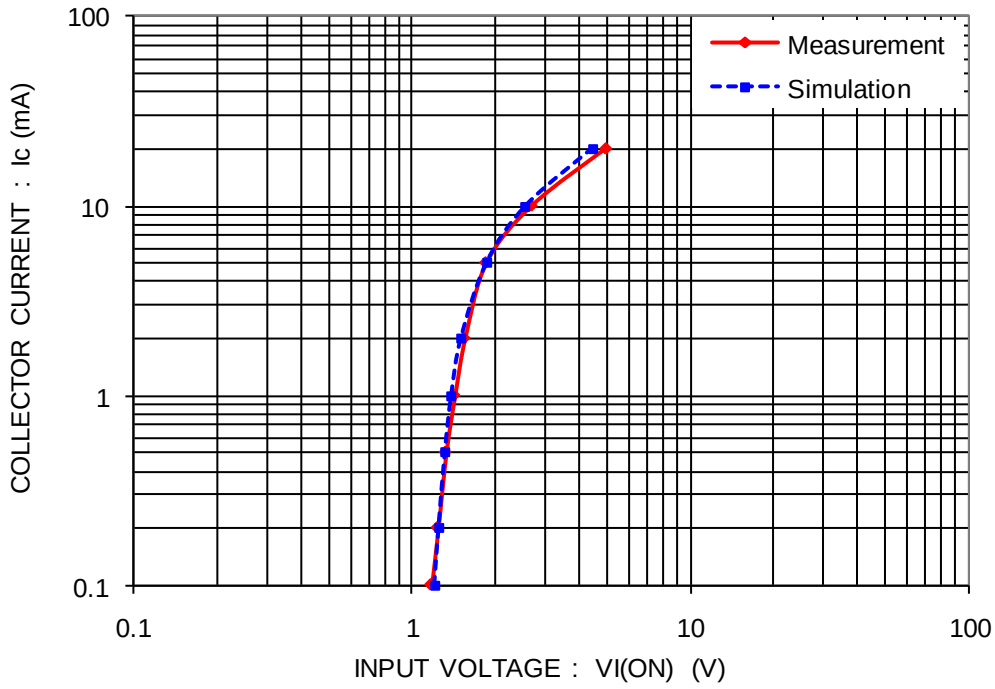

Simulation Result

Condition : V_{CE} = 0.2 V

Ic(mA)	$V_{I(ON)}$ (V)		Error (%)
	Measurement	Simulation	
0.1	1.175	1.203	2.38
0.2	1.240	1.246	0.45
0.5	1.325	1.313	-0.93
1	1.425	1.384	-2.88
2	1.550	1.500	-3.23
5	1.850	1.854	0.19
10	2.700	2.568	-4.88

All Rights Reserved Copyright (C) Bee Technologies Inc. 2010

I_C-$V_{I(OFF)}$ Characteristics

Circuit simulation result

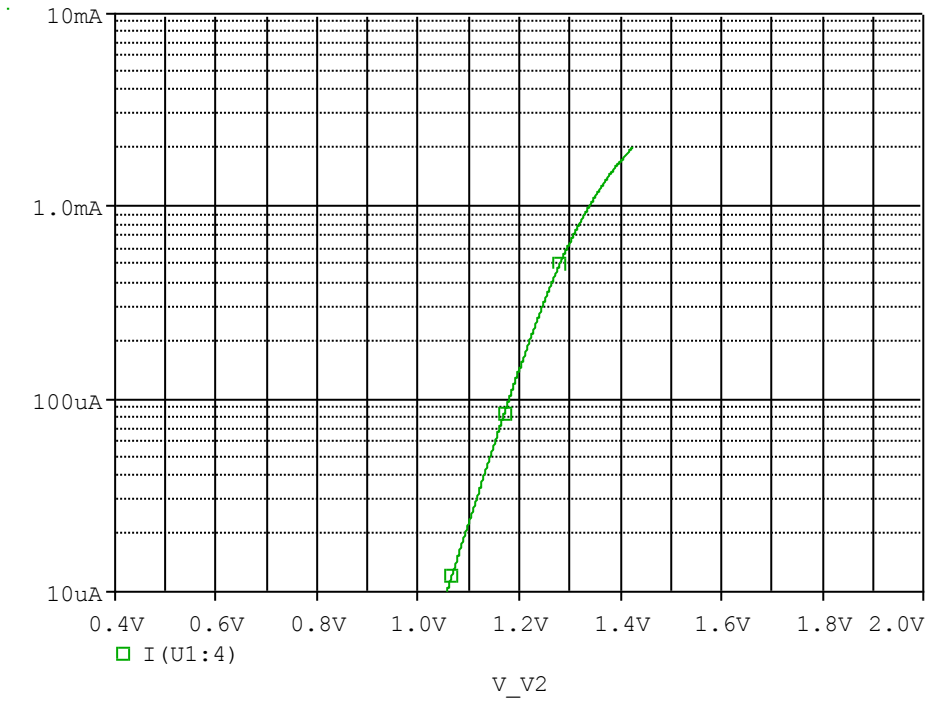

Evaluation circuit

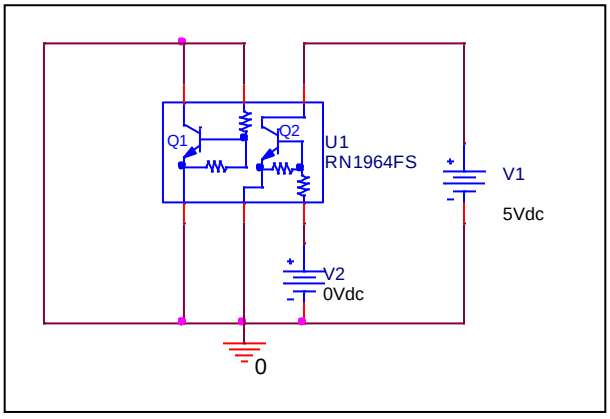

All Rights Reserved Copyright (C) Bee Technologies Inc. 2010

Comparison Graph

Circuit Simulation Result

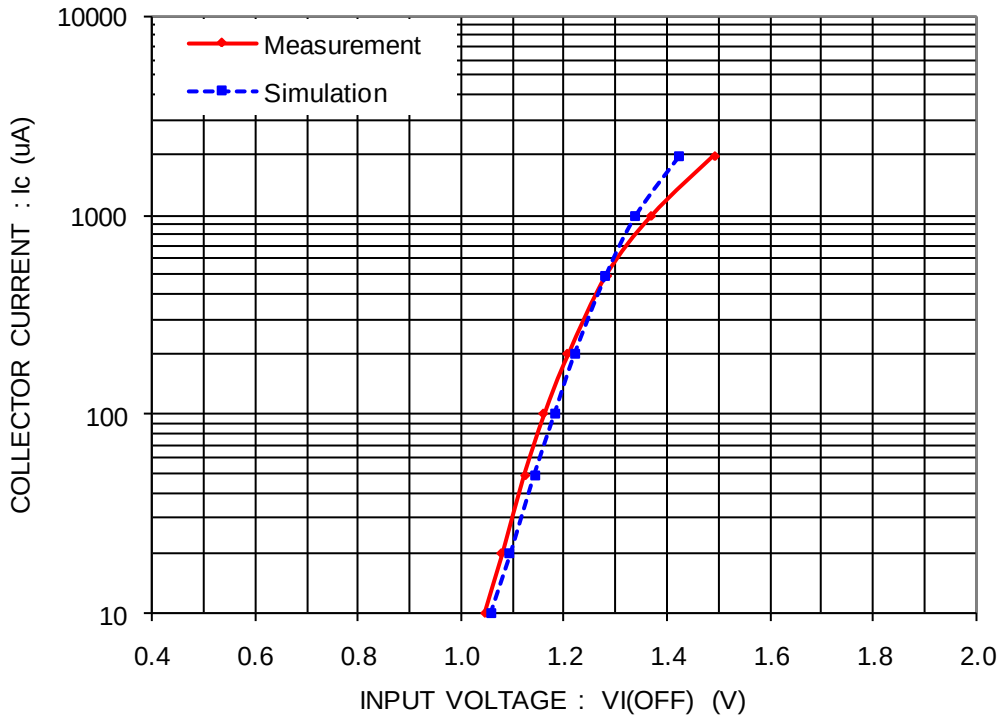

Simulation Result

Condition : V_{CC} = 5 V

Ic(uA)	$V_{I(OFF)}$ (V)		Error (%)
	Measurement	Simulation	
10	1.045	1.057	1.15
20	1.078	1.093	1.43
50	1.123	1.142	1.71
100	1.160	1.180	1.73
200	1.205	1.220	1.25
500	1.282	1.280	-0.14
1000	1.368	1.338	-2.16
2000	1.490	1.423	-4.50

All Rights Reserved Copyright (C) Bee Technologies Inc. 2010

h_{FE}-I_C Characteristics

Circuit simulation result

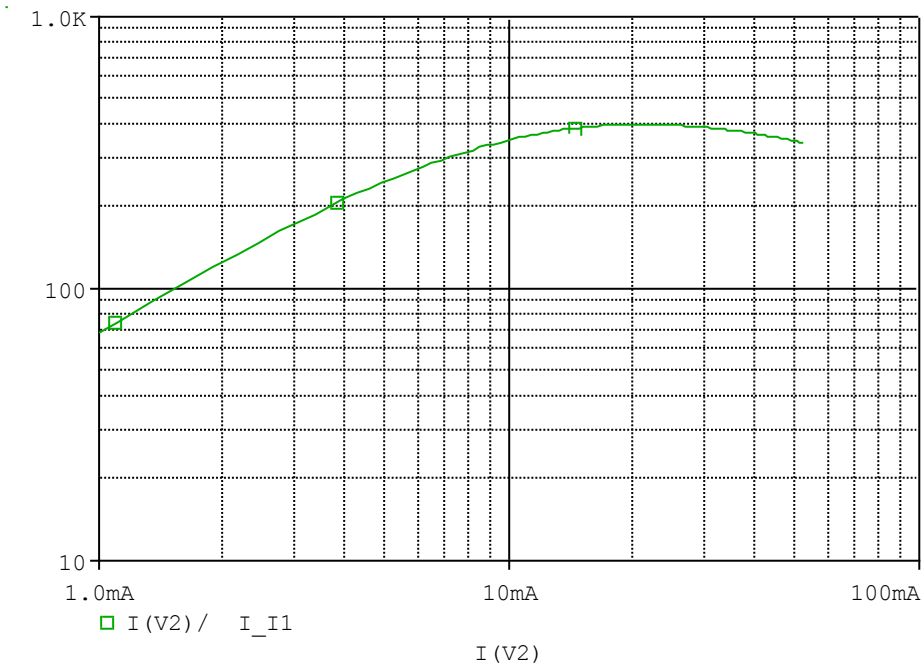

Evaluation circuit

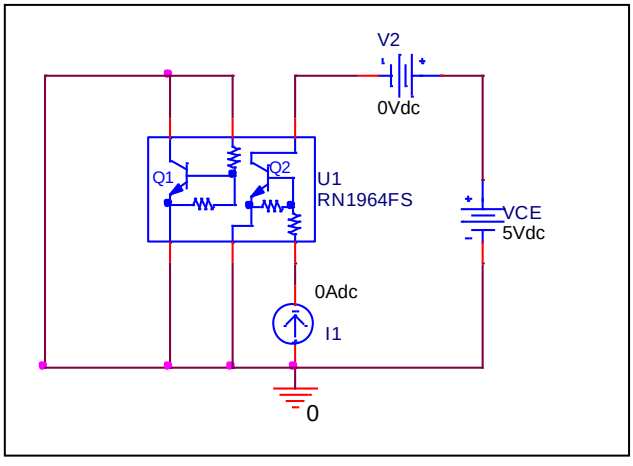

All Rights Reserved Copyright (C) Bee Technologies Inc. 2010

Comparison Graph

Circuit Simulation Result

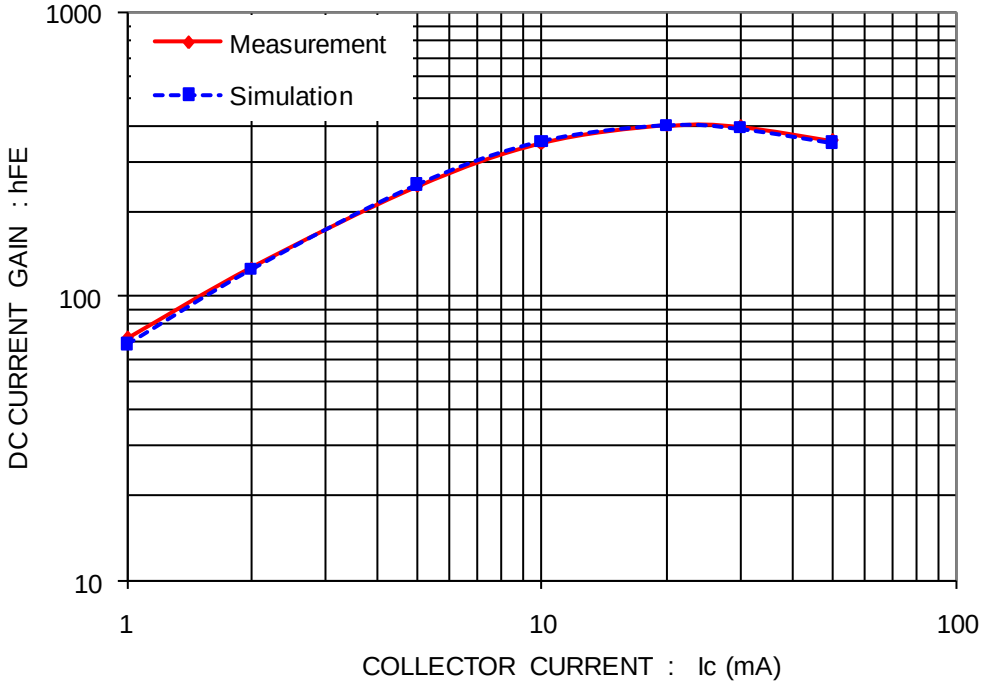

Simulation Result

Condition : V_{CC} = 5 V

Ic(mA)	hFE		Error (%)
	Measurement	Simulation	
1	71.750	68.399	-4.67
2	127.000	125.286	-1.35
5	245.000	248.894	1.59
10	347.500	352.430	1.42
20	400.000	401.744	0.44
30	398.000	391.988	-1.51
50	355.000	349.405	-1.58

All Rights Reserved Copyright (C) Bee Technologies Inc. 2010

$V_{CE(Sat)}$-I_C Characteristics

Circuit simulation result

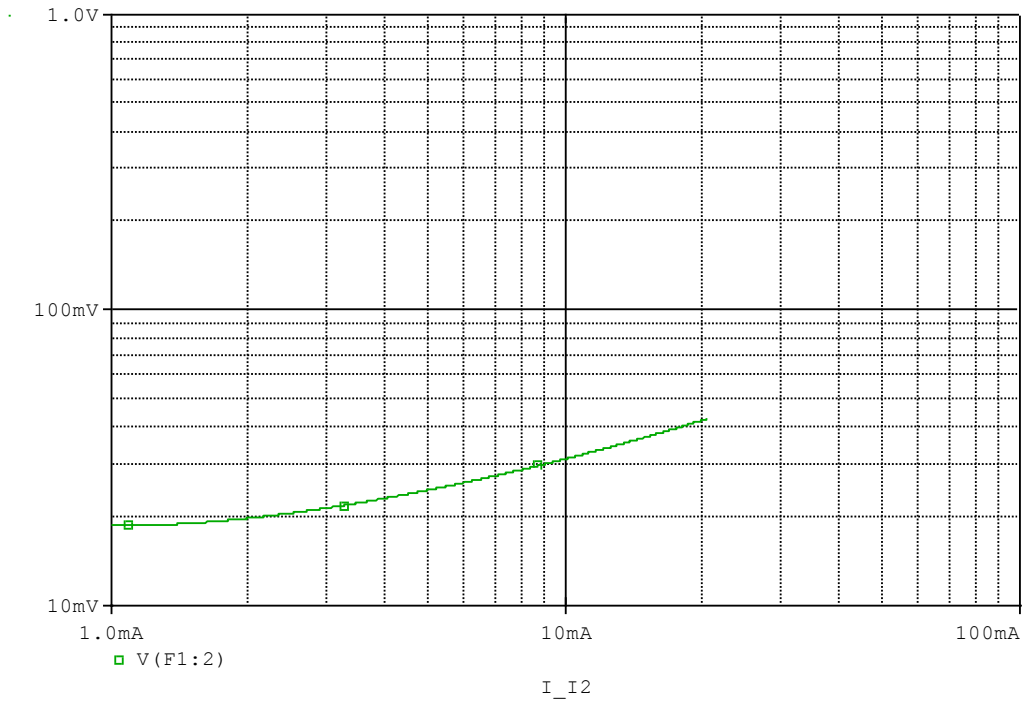

Evaluation circuit

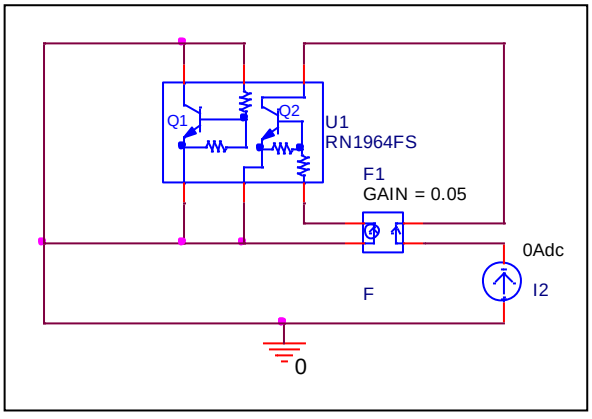

All Rights Reserved Copyright (C) Bee Technologies Inc. 2010

Comparison Graph

Circuit Simulation Result

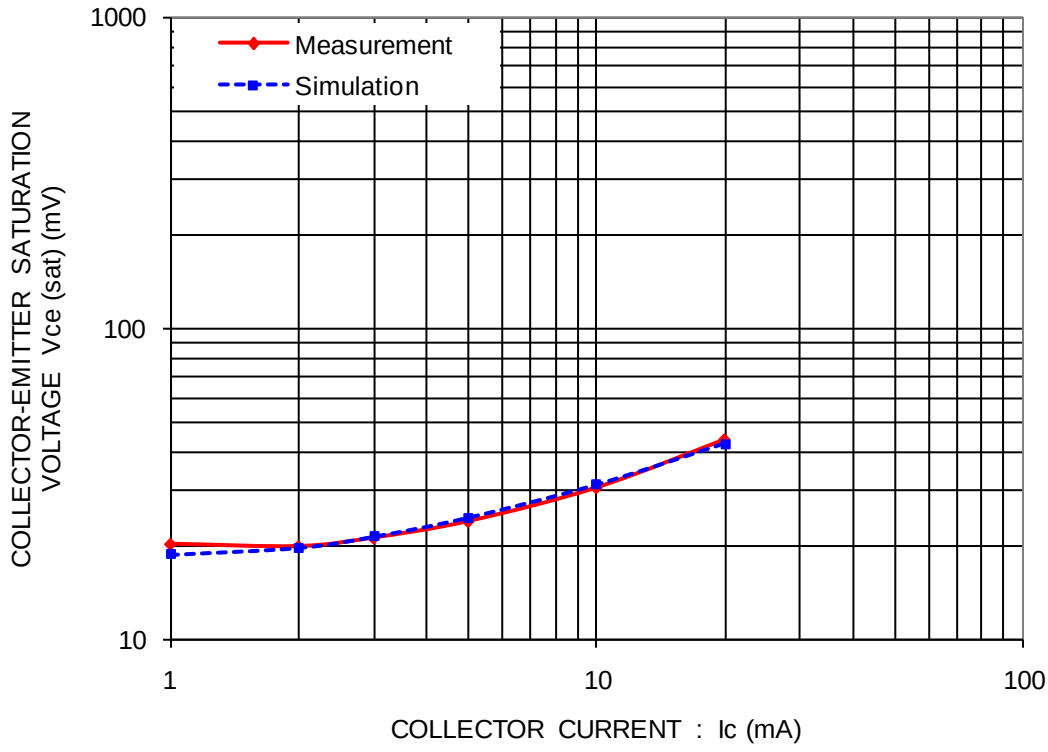

Simulation Result

Condition : IC/IB=20

Ic(mA)	VCE(sat) (mV)		Error (%)
	Measurement	Simulation	
2	19.950	19.759	-0.96
3	21.250	21.446	0.92
5	24.000	24.646	2.69
10	30.800	31.399	1.94
20	44.000	42.447	-3.53

All Rights Reserved Copyright (C) Bee Technologies Inc. 2010