Device Modeling Report

COMPONENTS : CMOS DIGITAL INTEGRATED CIRCUIT
PART NUMBER : TC74AC541P
MANUFACTURER : TOSHIBA

Bee Technologies Inc.

All Rights Reserved Copyright (c) Bee Technologies Inc. 2005

Truth Table

Circuit simulation result

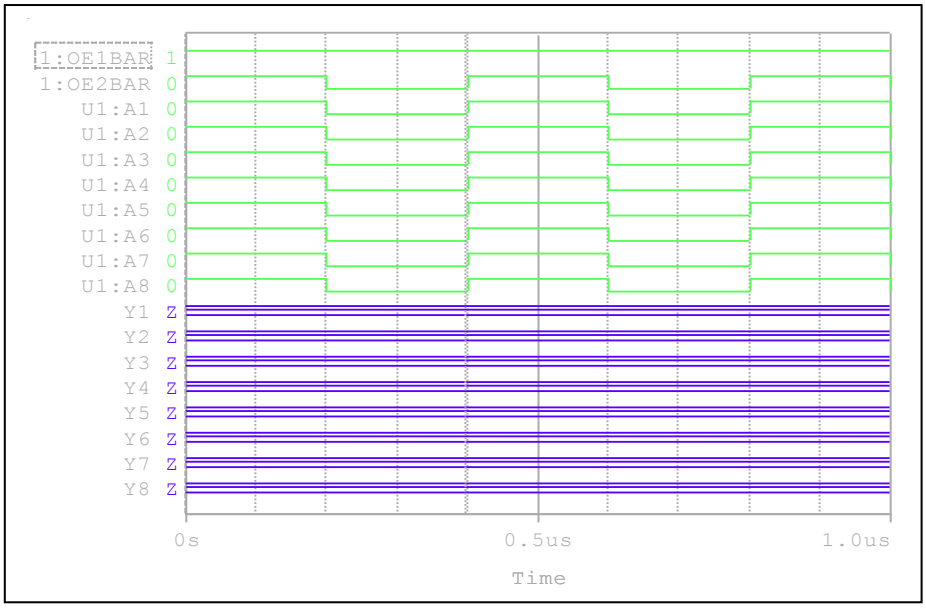

Evaluation circuit

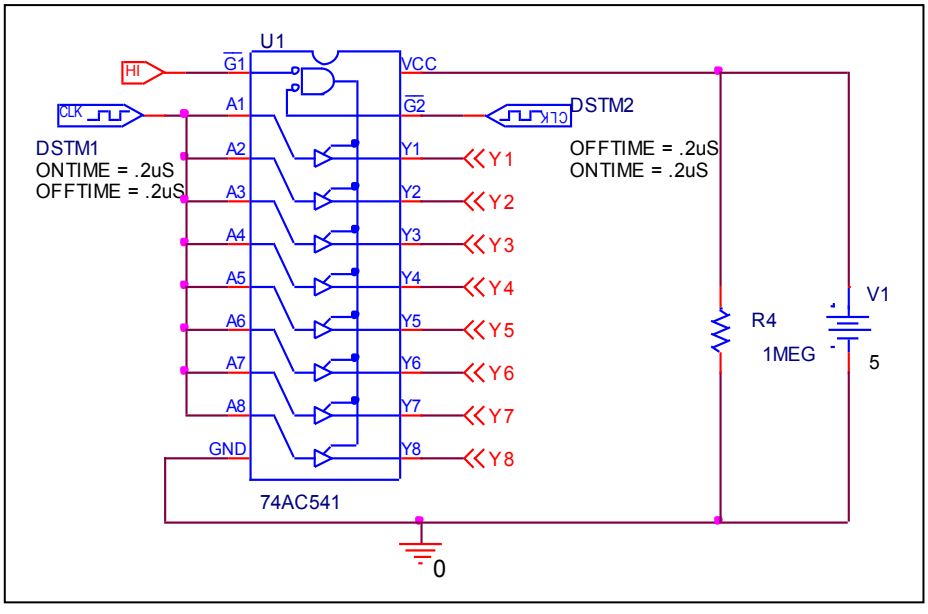

Comparison table

Input			Output		%Error
$\overline{G1}$	$\overline{G2}$	An	Yn (Measurement)	Yn (Simulation)	
H	X	X	Z	Z	0

All Rights Reserved Copyright (c) Bee Technologies Inc. 2005

Truth Table

Circuit simulation result

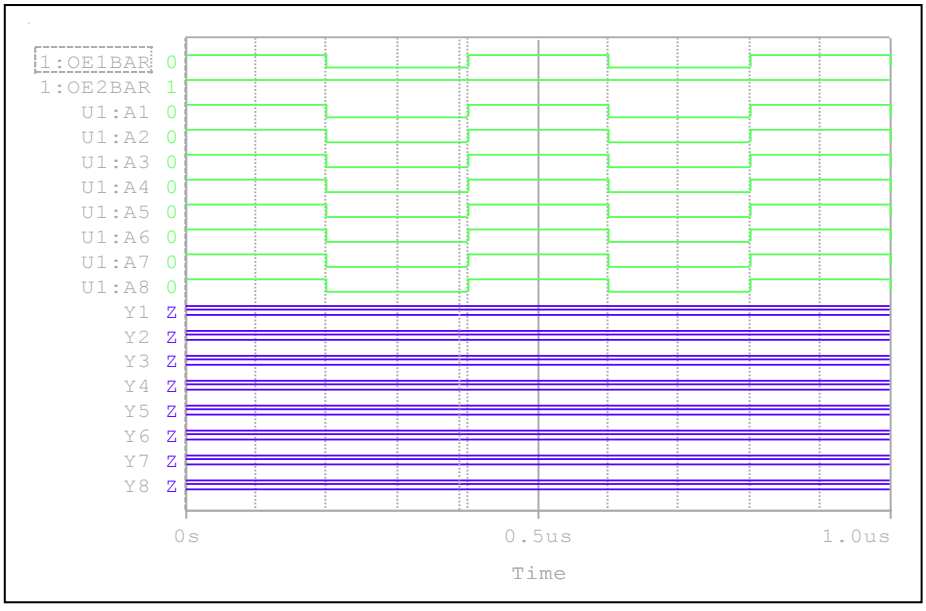

Evaluation circuit

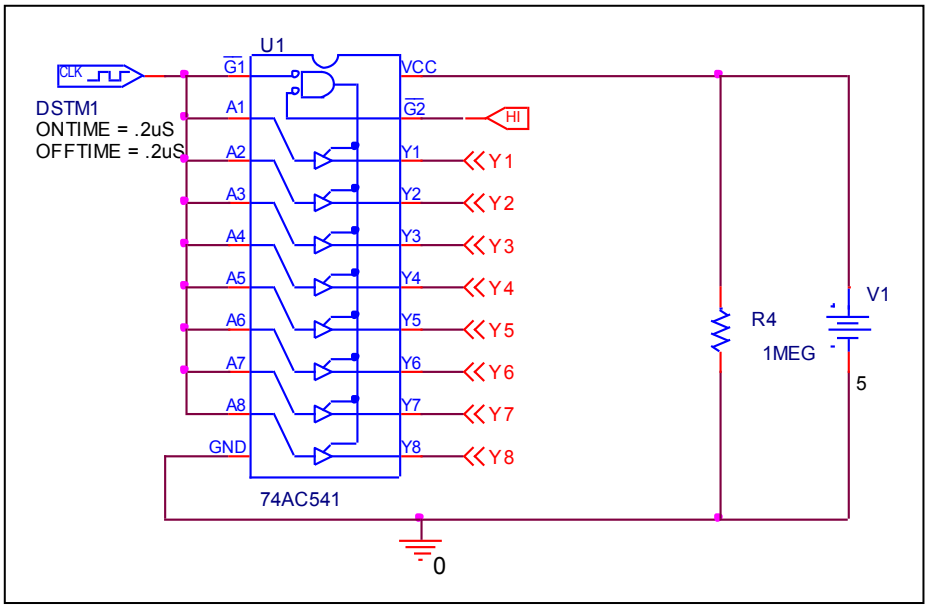

Comparison table

Input			Output		%Error
$\overline{G1}$	$\overline{G2}$	An	Yn (Measurement)	Yn (Simulation)	
X	H	X	Z	Z	0

All Rights Reserved Copyright (c) Bee Technologies Inc. 2005

Truth Table

Circuit simulation result

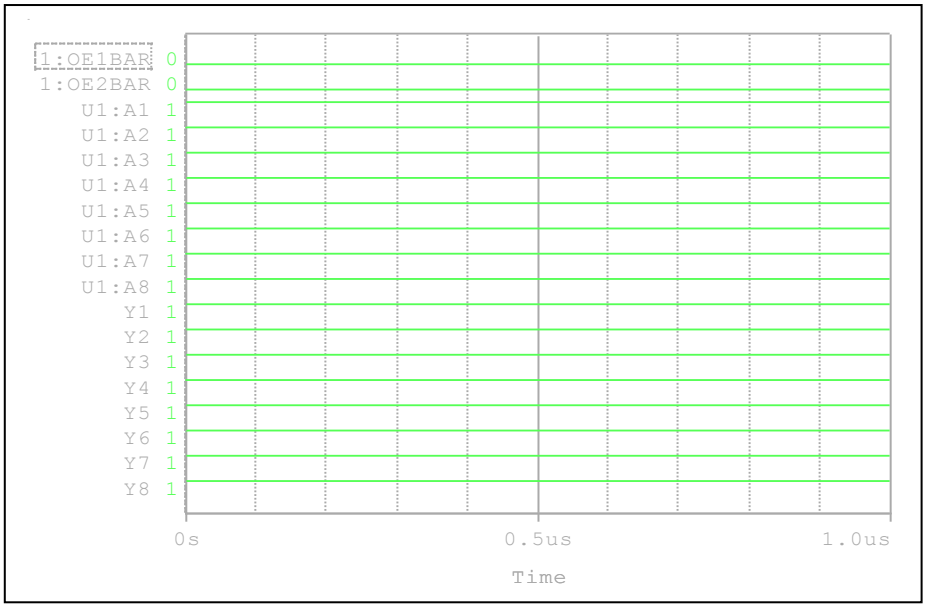

Evaluation circuit

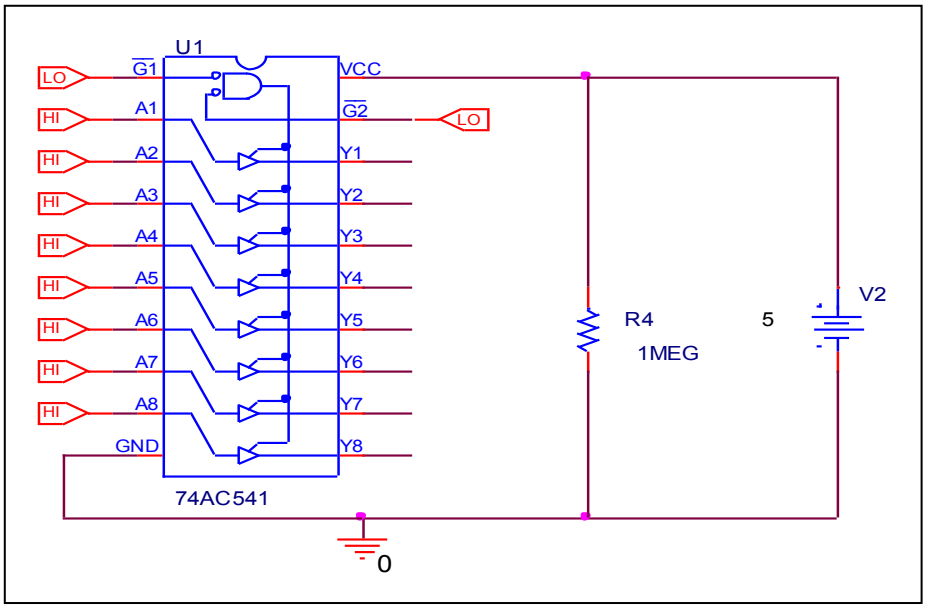

Comparison table

Input			Output		%Error
$\overline{G1}$	$\overline{G2}$	An	Yn (Measurement)	Yn (Simulation)	
L	L	H	H	H	0

All Rights Reserved Copyright (c) Bee Technologies Inc. 2005

Truth Table

Circuit simulation result

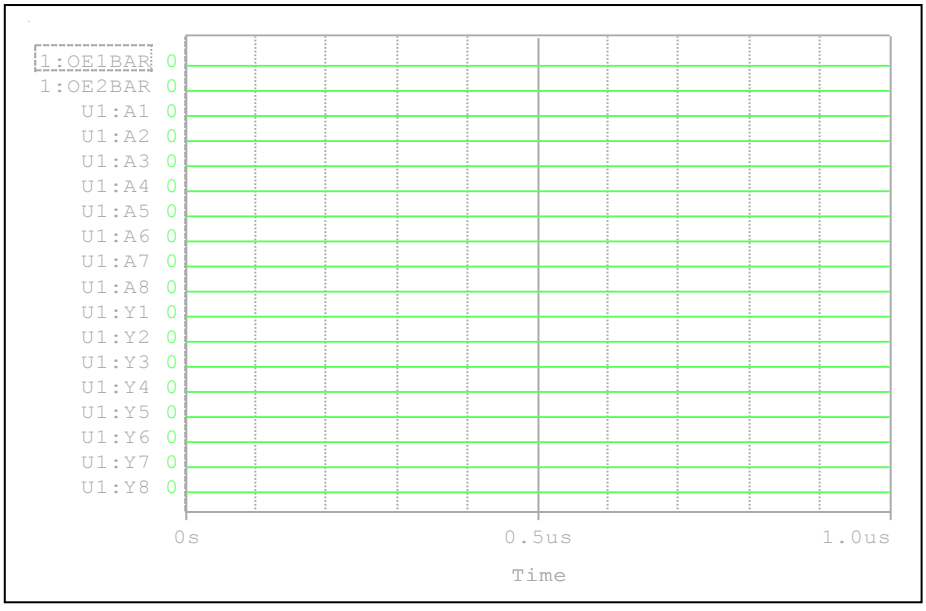

Evaluation circuit

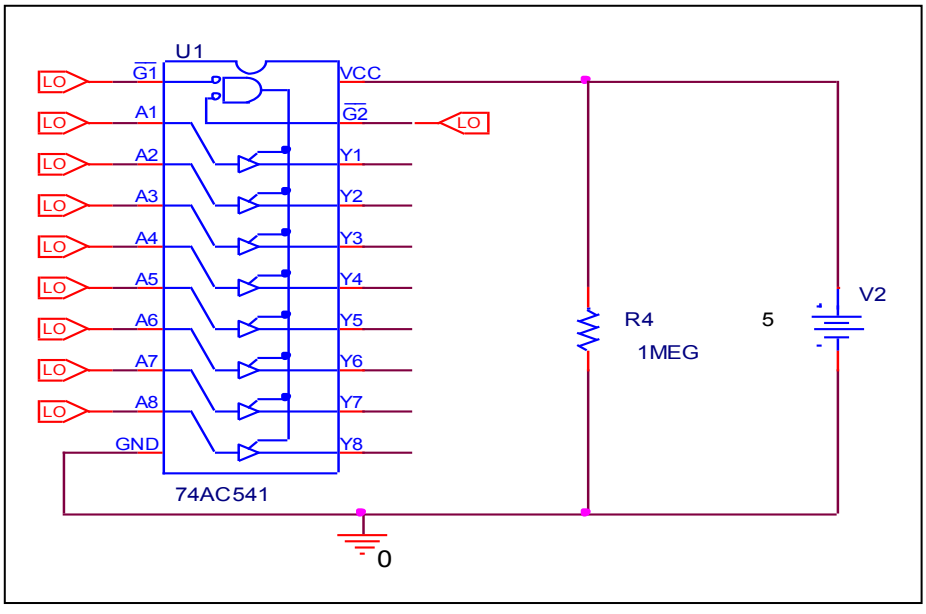

Comparison table

Input			Output		%Error
$\overline{G1}$	$\overline{G2}$	An	Yn (Measurement)	Yn (Simulation)	
L	L	L	L	L	0

All Rights Reserved Copyright (c) Bee Technologies Inc. 2005

High Level and Low Level Input Voltage

Circuit simulation result

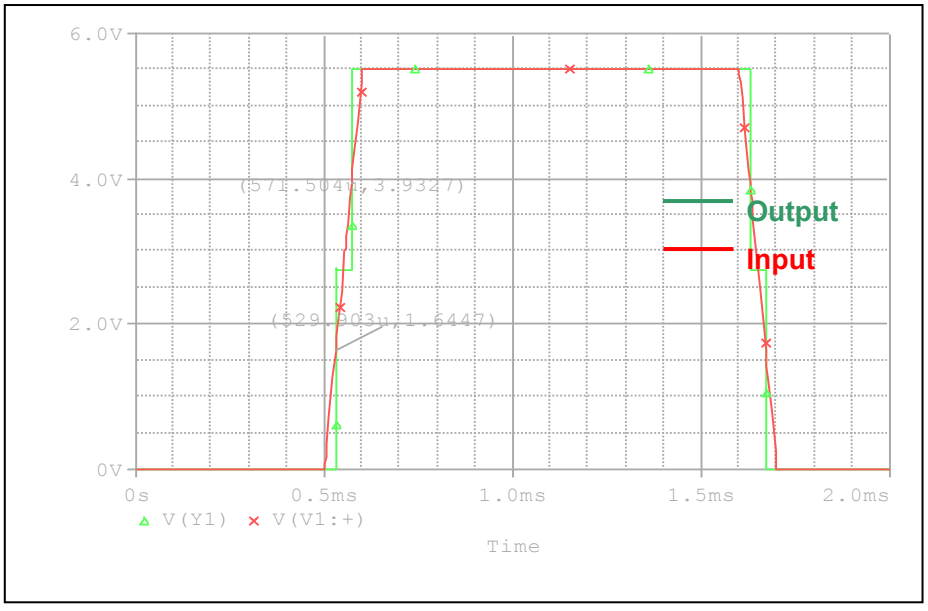

Evaluation circuit

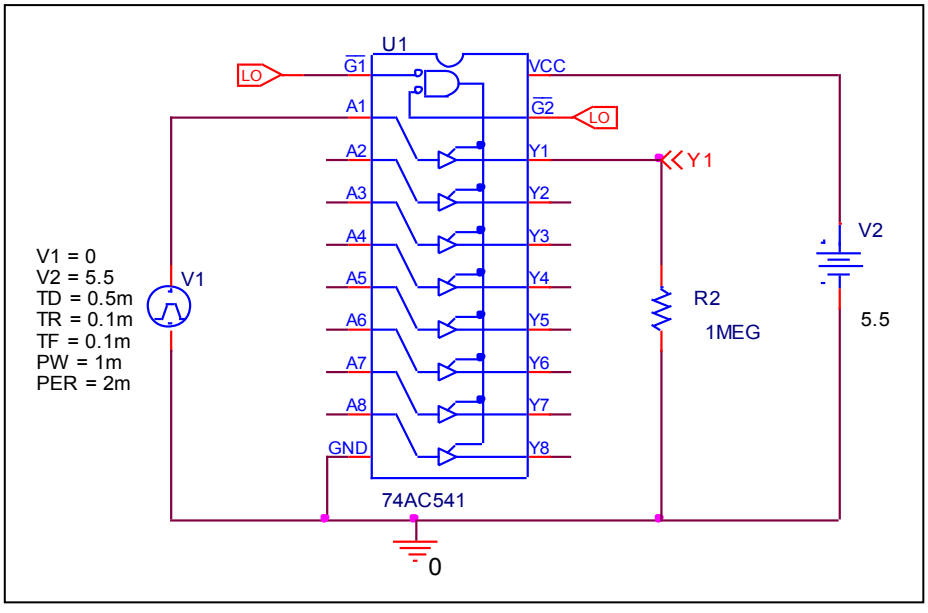

Comparison table

V_{CC} = 5.5V	Measurement	Simulation	%Error
V_{IH} (V)	3.85	3.9327	2.148
V_{IL} (V)	1.65	1.6447	-0.321

All Rights Reserved Copyright (c) Bee Technologies Inc. 2005

High Level and Low Level Output Voltage

Circuit simulation result

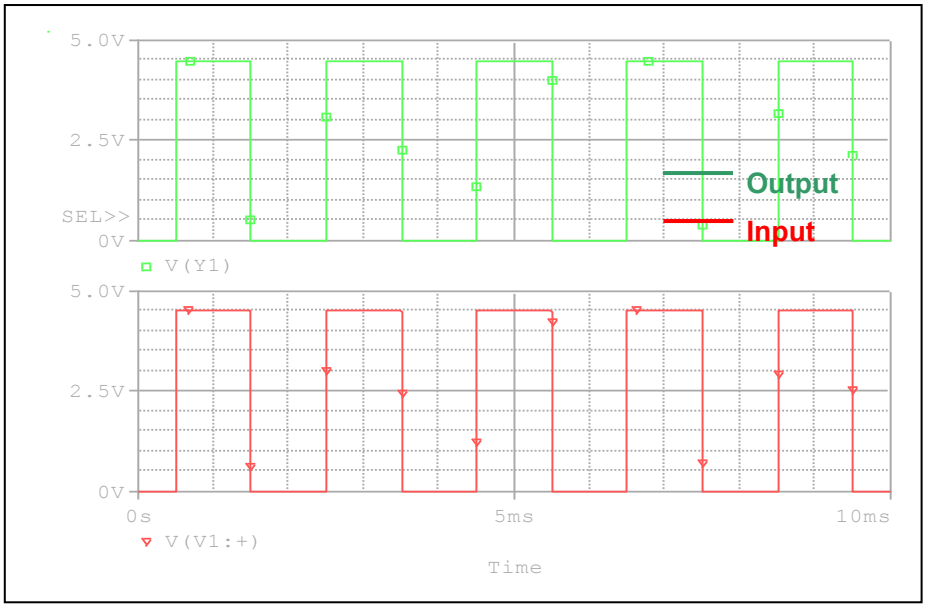

Evaluation circuit

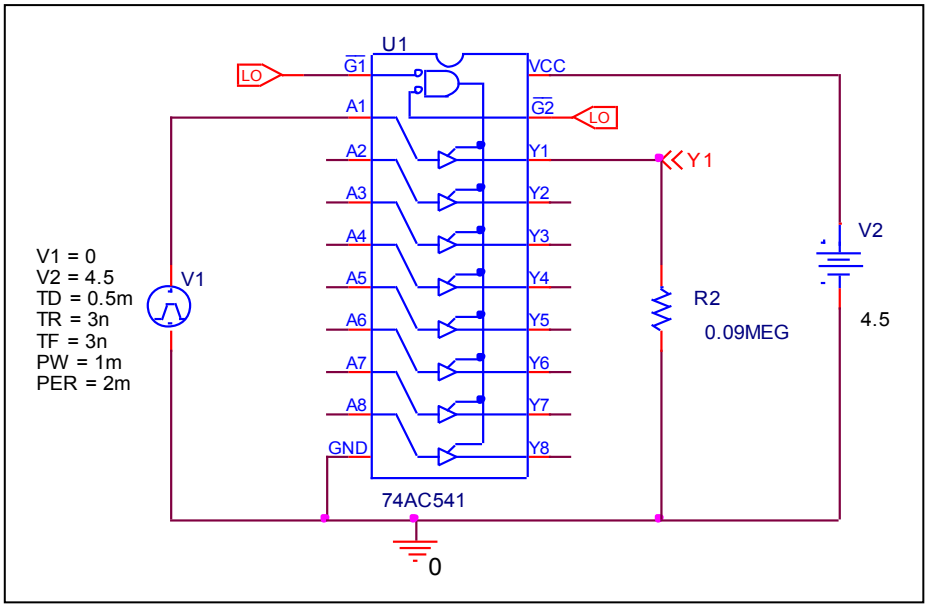

Comparison table

V_{CC} = 4.5V	Measurement	Simulation	%Error
V_{OH} (V)	4.5	4.4988	-0.027
V_{OL} (V)	0	0	0

All Rights Reserved Copyright (c) Bee Technologies Inc. 2005

Propagation Delay Time

Circuit simulation result

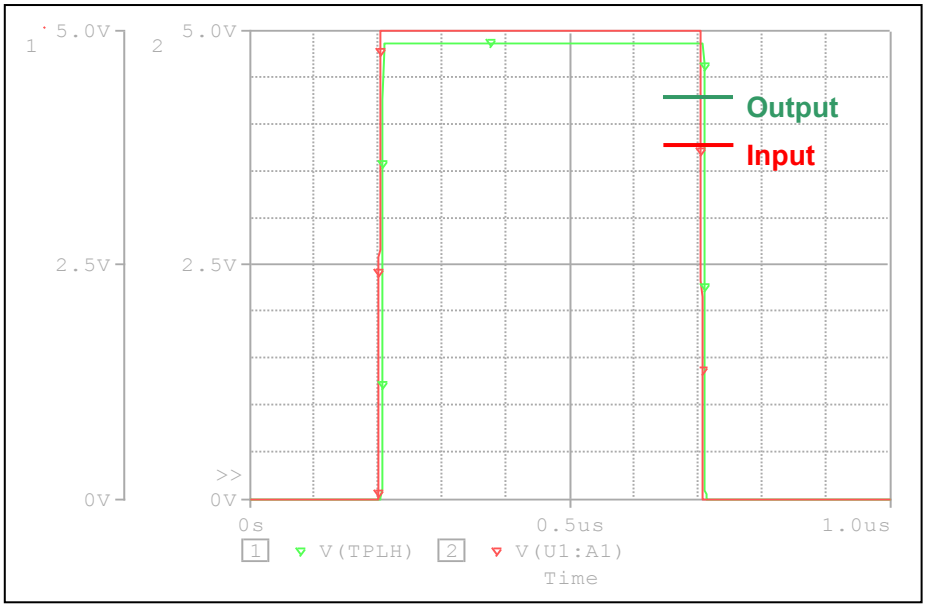

Evaluation circuit

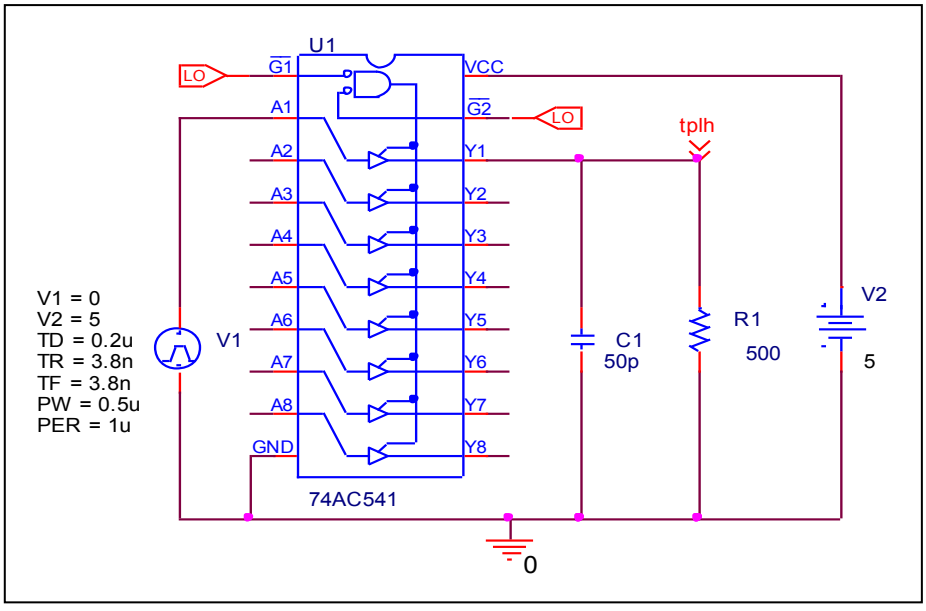

Comparison table C_L = 50 pF, R_L = 500 Ω

V_{CC} = 5 V, tr = tf = 3 ns	Measurement	Simulation	%Error
t_{PLH} (ns)	4.7	4.7202	0.430
t_{PHL} (ns)	4.7	4.7990	2.106

All Rights Reserved Copyright (c) Bee Technologies Inc. 2005

Output enable time, high impedance (off) to high output (t_{PZH})
Output disable time, high to high impedance (off) output (t_{PHZ})

Circuit simulation result

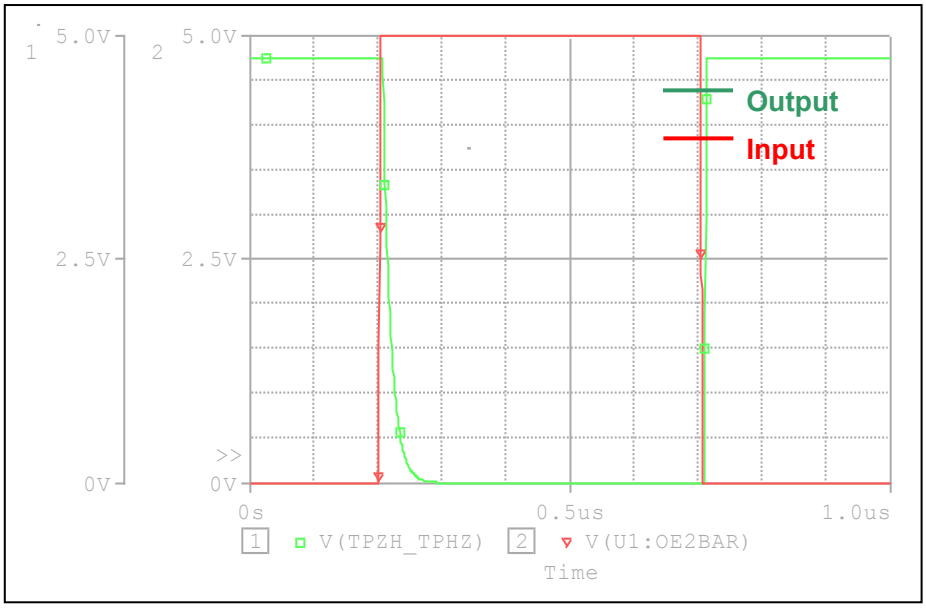

Evaluation circuit

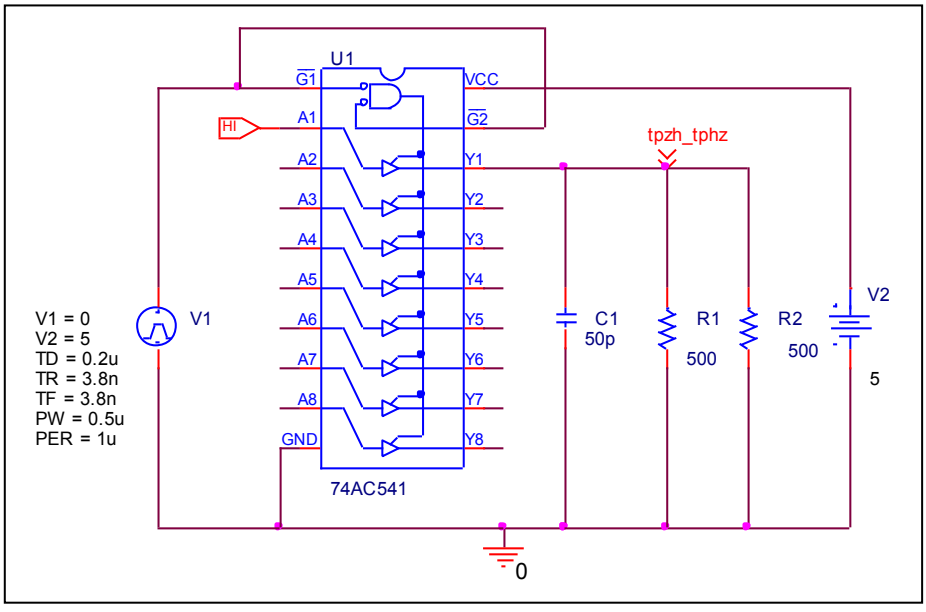

Comparison table **C_L = 50 pF, R_L = 500 Ω**

V_{CC} = 5 V, tr = tf = 3 ns	Measurement	Simulation	%Error
t_{PZH} (ns)	6.4	6.5171	1.830
t_{PHZ} (ns)	6.4	6.4001	0.002

All Rights Reserved Copyright (c) Bee Technologies Inc. 2005

Output enable time, high impedance (off) to low output (t_{PZL})
Output disable time, low to high impedance (off) output (t_{PLZ})

Circuit simulation result

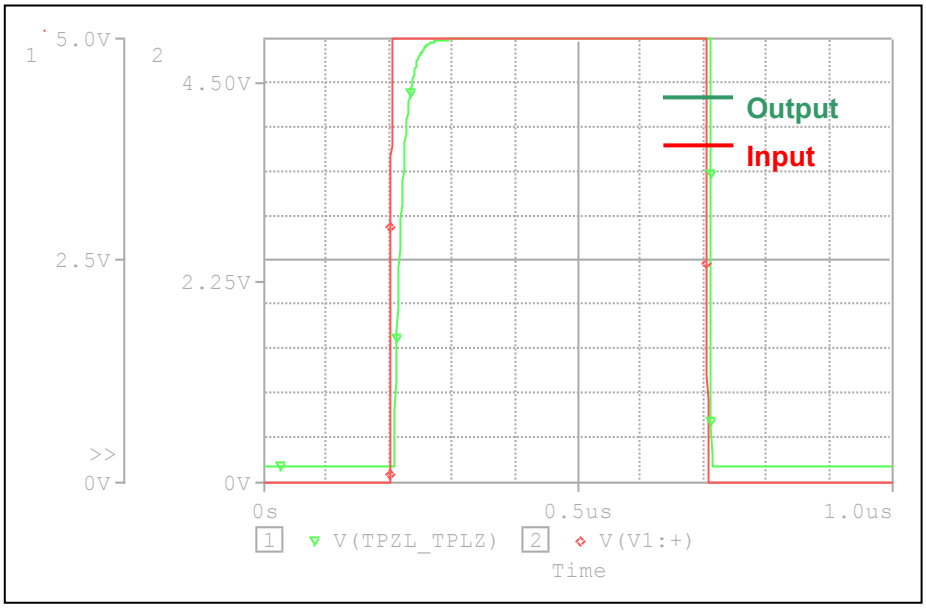

Evaluation circuit

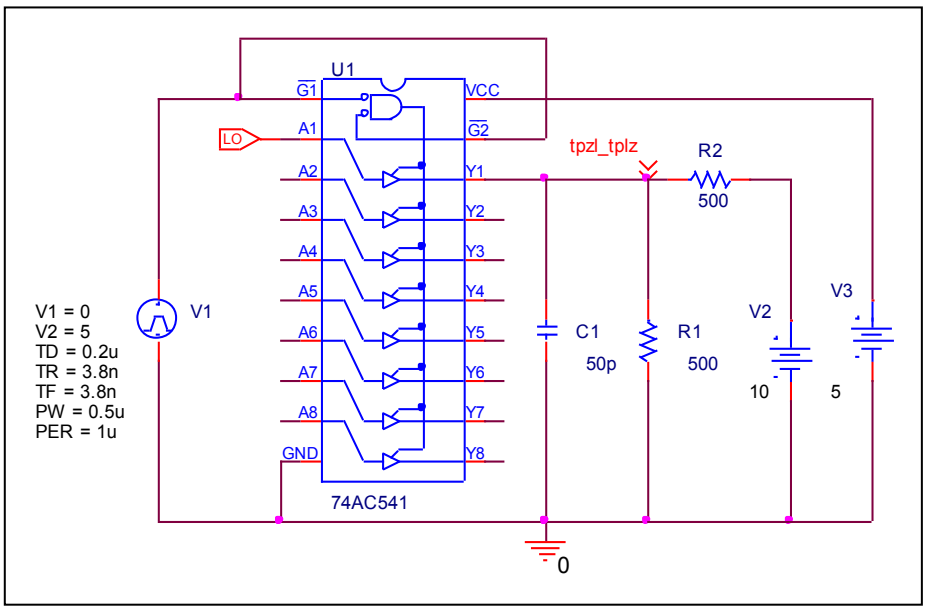

Comparison table **C_L = 50 pF, R_L = 500 Ω**

V_{CC} = 5 V, tr = tf = 3 ns	Measurement	Simulation	%Error
t_{PZL} (ns)	6.4	6.4668	1.044
t_{PLZ} (ns)	6.4	6.4933	1.458

All Rights Reserved Copyright (c) Bee Technologies Inc. 2005