Device Modeling Report

COMPONENTS : CMOS DIGITAL INTEGRATED CIRCUIT
PART NUMBER : TC74ACT00FT
MANUFACTURER : TOSHIBA

Bee Technologies Inc.

All Rights Reserved Copyright (c) Bee Technologies Inc. 2005

Truth Table

Circuit simulation result

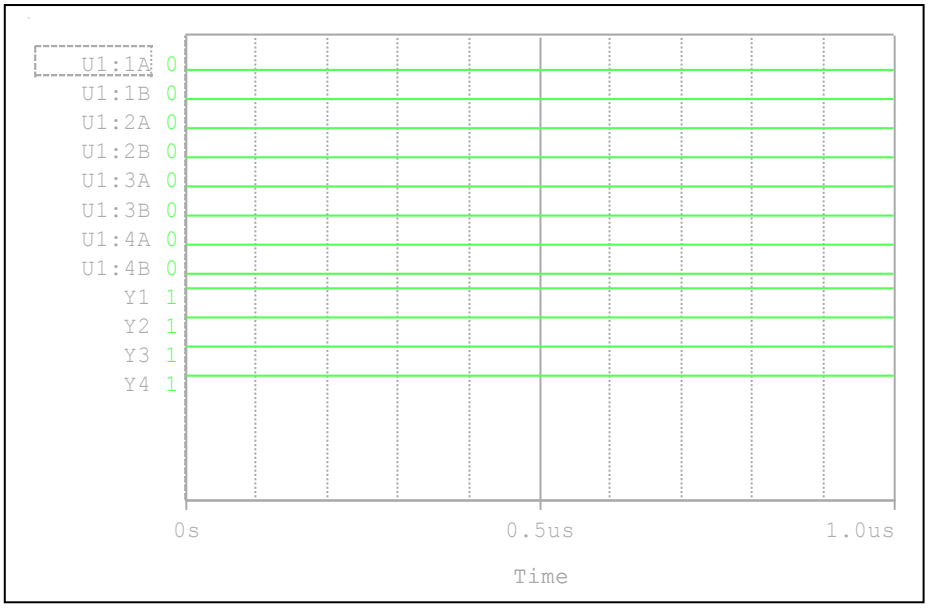

Evaluation circuit

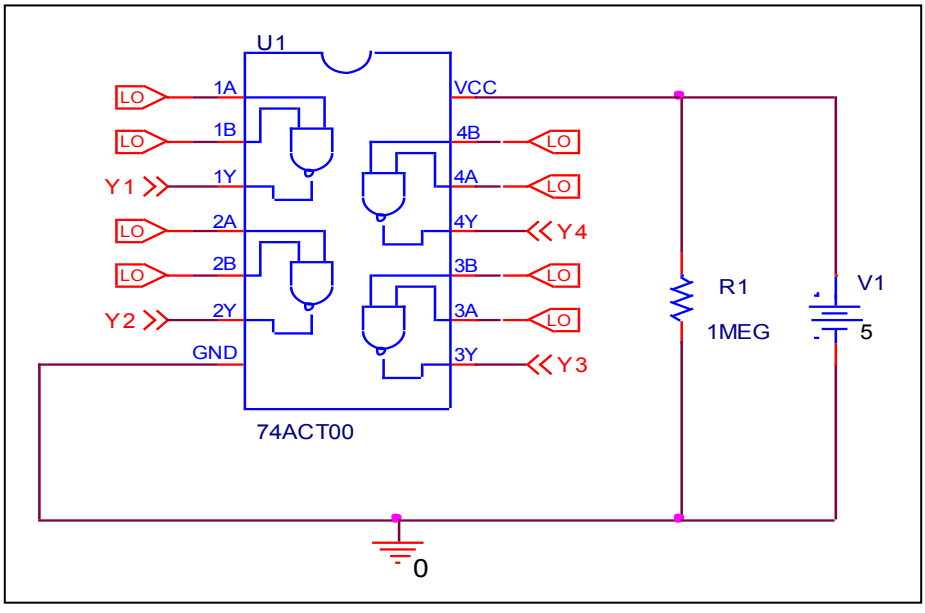

Comparison table

Input		Output		%Error
An	Bn	Yn (Measurement)	Yn (Simulation)	
L	L	H	H	0

All Rights Reserved Copyright (c) Bee Technologies Inc. 2005

Truth Table

Circuit simulation result

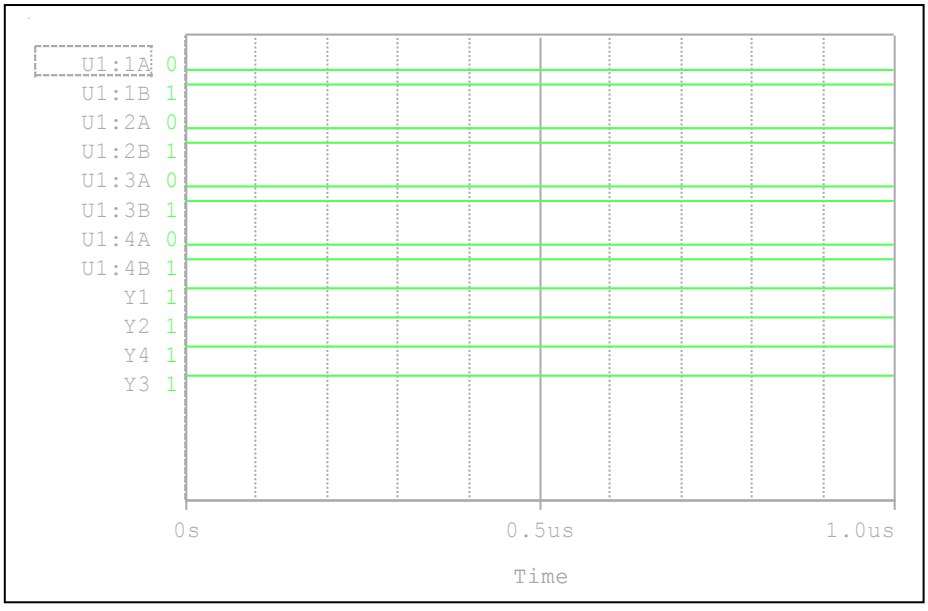

Evaluation circuit

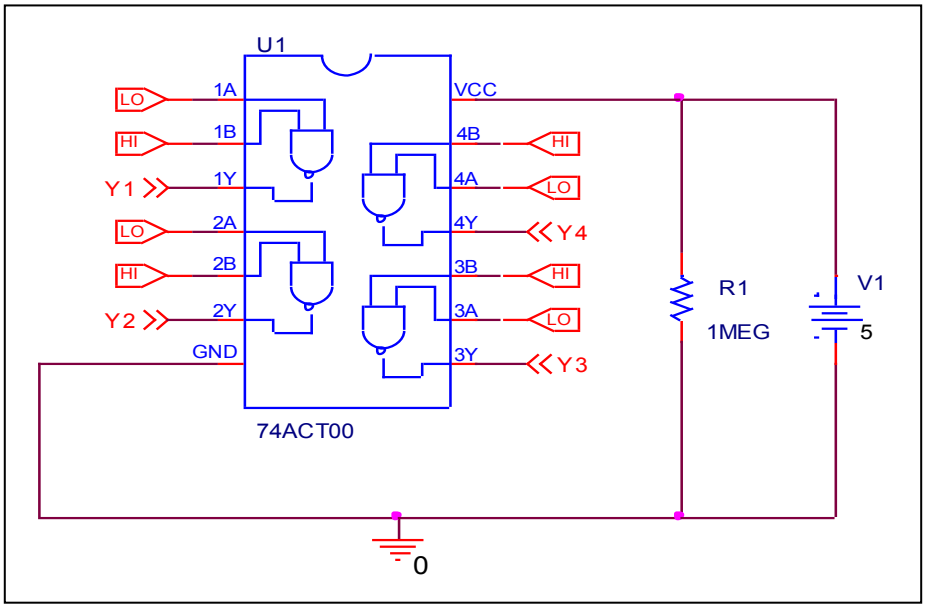

Comparison table

Input		Output		%Error
An	Bn	Yn (Measurement)	Yn (Simulation)	
L	H	H	H	0

All Rights Reserved Copyright (c) Bee Technologies Inc. 2005

Truth Table

Circuit simulation result

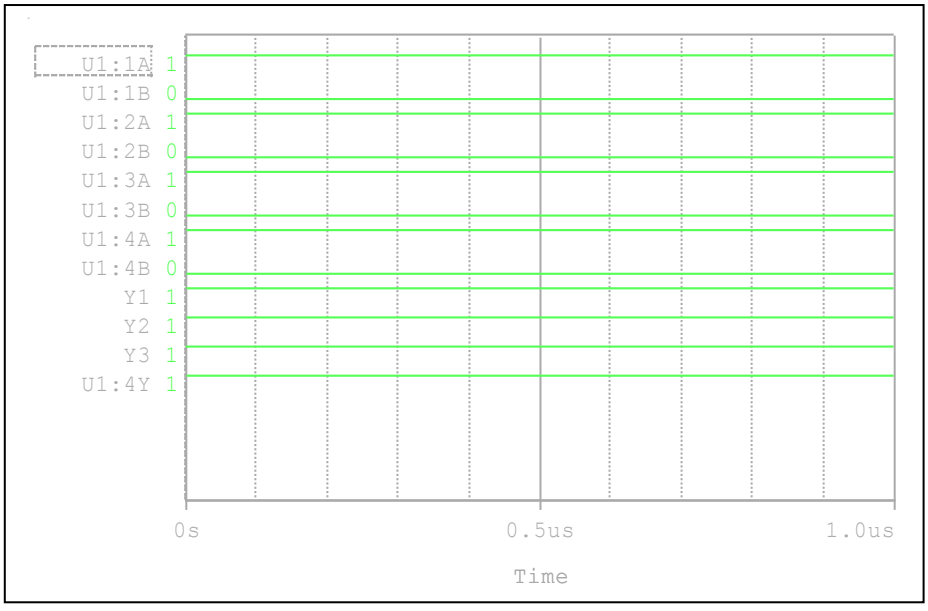

Evaluation circuit

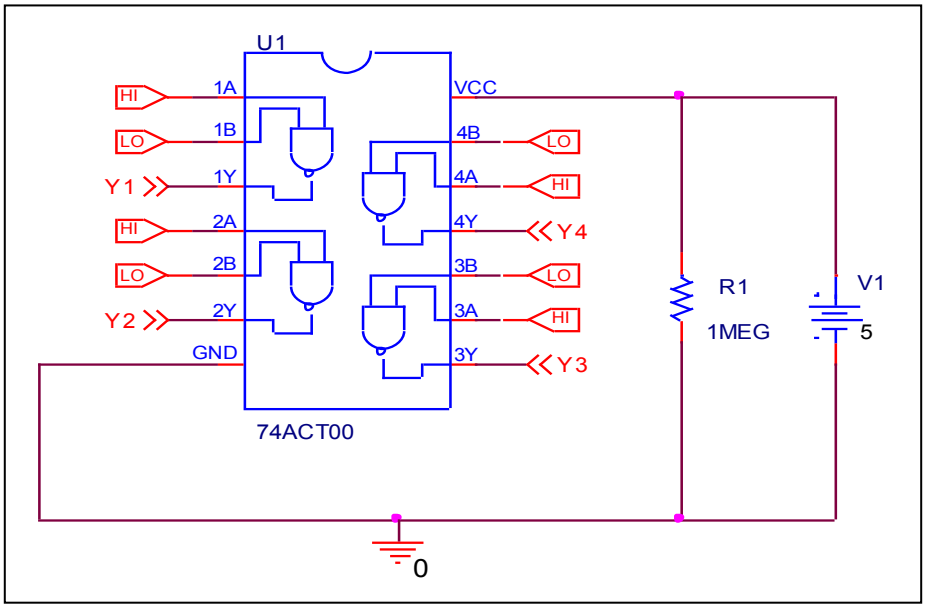

Comparison table

Input		Output		%Error
An	Bn	Yn (Measurement)	Yn (Simulation)	
H	L	H	H	0

All Rights Reserved Copyright (c) Bee Technologies Inc. 2005

Truth Table

Circuit simulation result

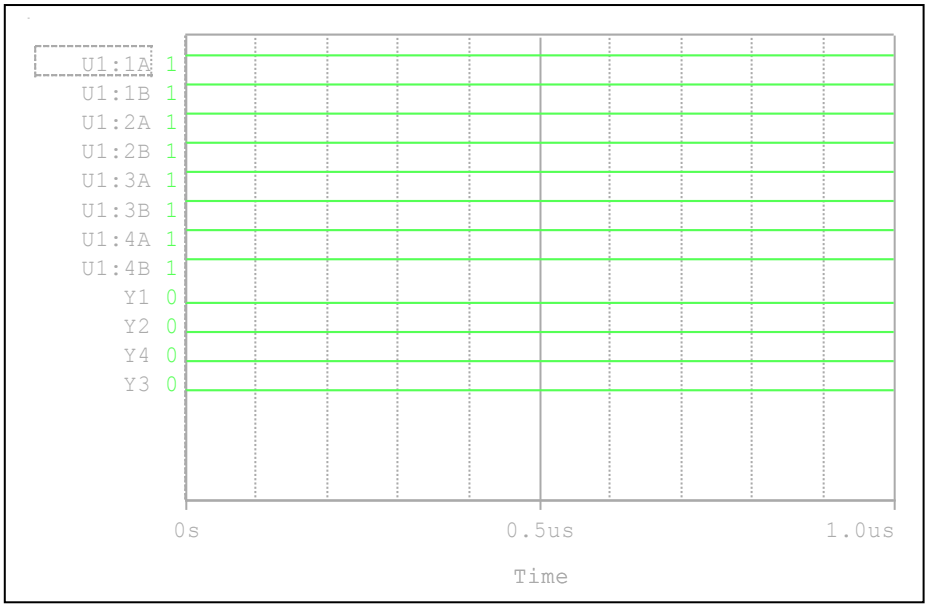

Evaluation circuit

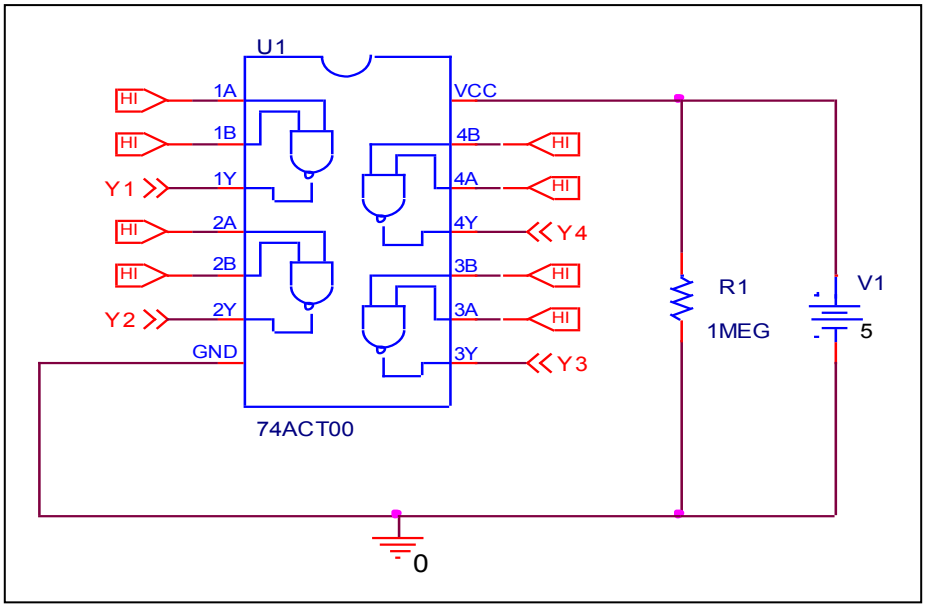

Comparison table

Input		Output		%Error
An	Bn	Yn (Measurement)	Yn (Simulation)	
H	H	L	L	0

All Rights Reserved Copyright (c) Bee Technologies Inc. 2005

High Level and Low Level Input Voltage

Circuit simulation result

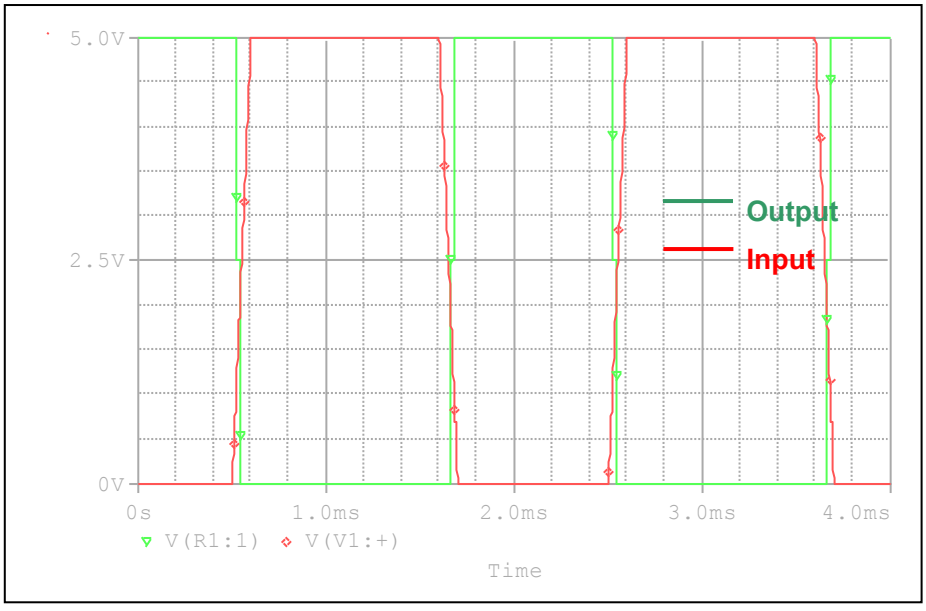

Evaluation circuit

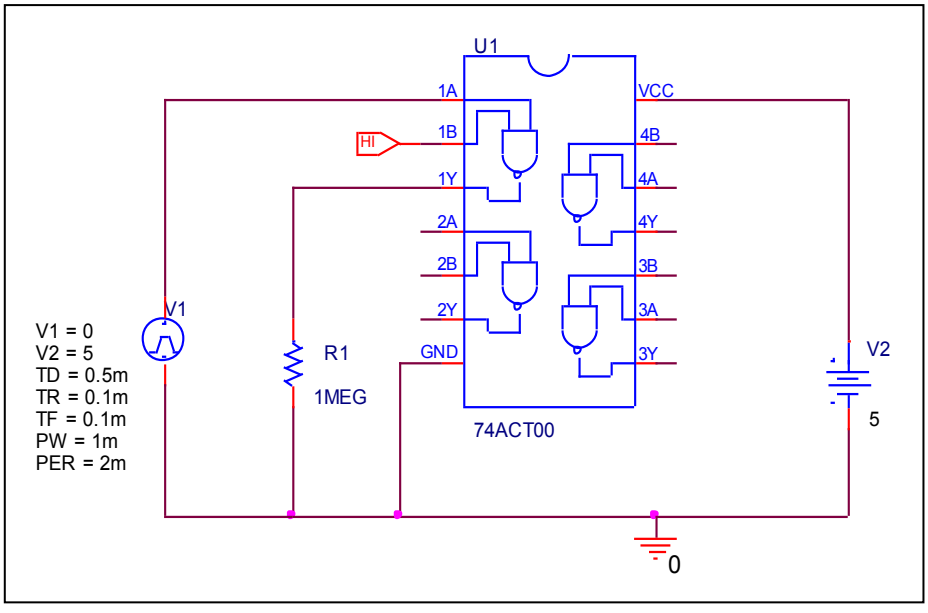

Comparison table

V_{CC} = 5V	Measurement	Simulation	%Error
V_{IH} (V)	2	2	0
V_{IL} (V)	0.8	0.799220	-0.098

All Rights Reserved Copyright (c) Bee Technologies Inc. 2005

High Level and Low Level Output Voltage

Circuit simulation result

Evaluation circuit

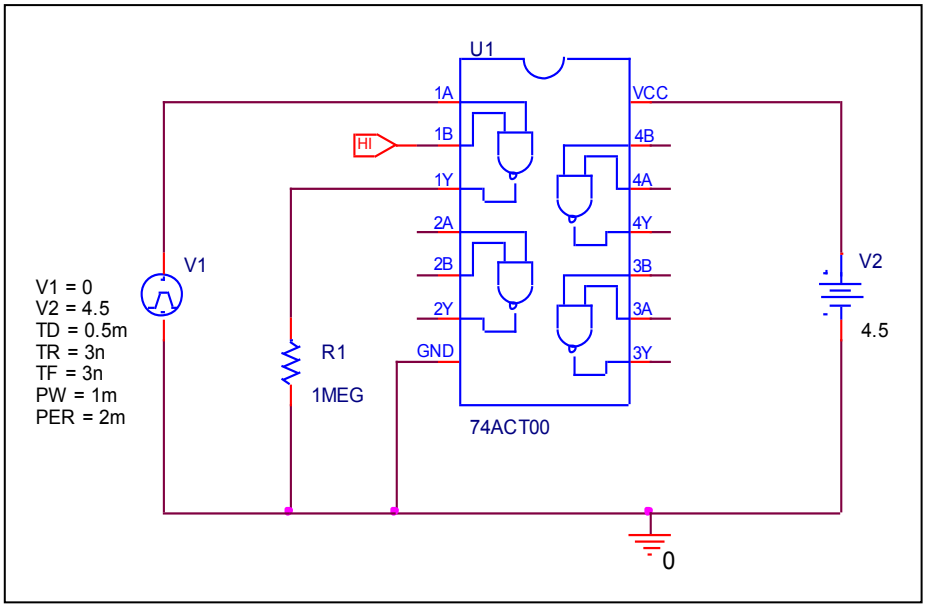

Comparison table

V_{CC} = 4.5V	Measurement	Simulation	%Error
V_{OH} (V)	4.5	4.4994	-0.013
V_{OL} (V)	0	0	0

All Rights Reserved Copyright (c) Bee Technologies Inc. 2005

Propagation Delay Time

Circuit simulation result

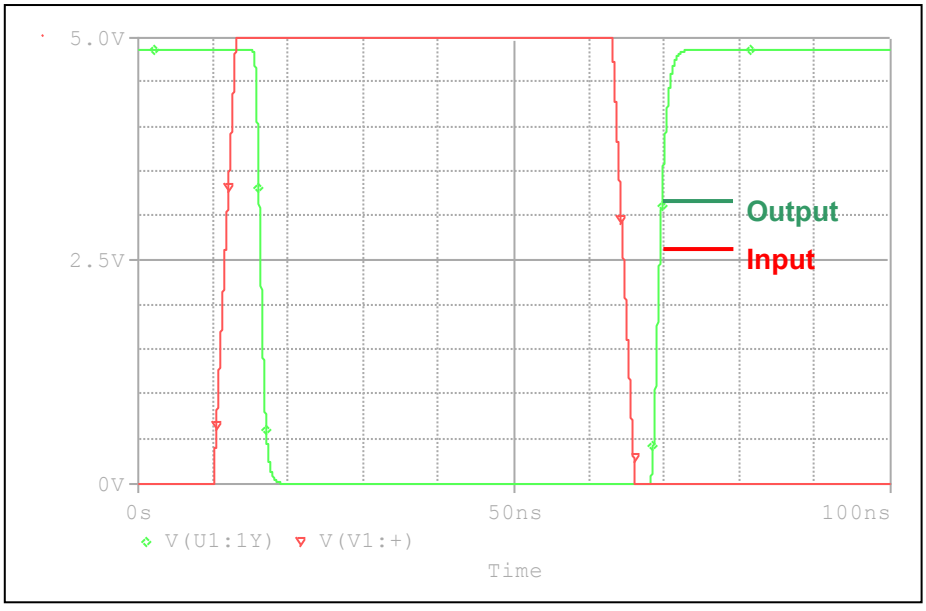

Evaluation circuit

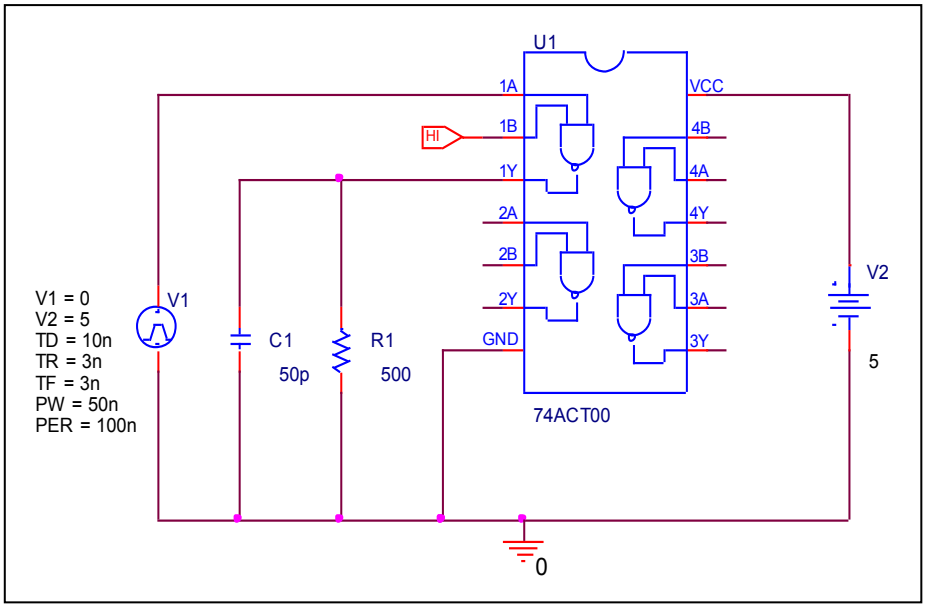

Comparison table

C_L=50pF,R_L=500Ω T_r=T_f=3ns	Measurement	Simulation	%Error
t_{pLH} (ns)	4.7	4.7709	1.509
t_{pHL} (ns)	4.7	4.7899	1.913

All Rights Reserved Copyright (c) Bee Technologies Inc. 2005