Device Modeling Report

COMPONENTS : CMOS DIGITAL INTEGRATED CIRCUIT
PART NUMBER : TC74HCT00AF
MANUFACTURER : TOSHIBA

Bee Technologies Inc.

All Rights Reserved Copyright (c) Bee Technologies Inc. 2005

Truth Table

Circuit simulation result

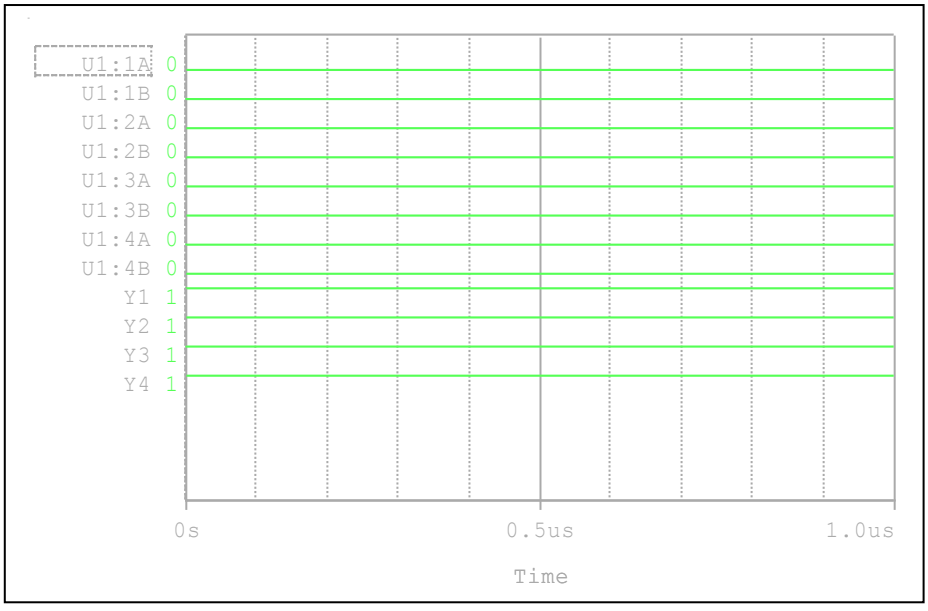

Evaluation circuit

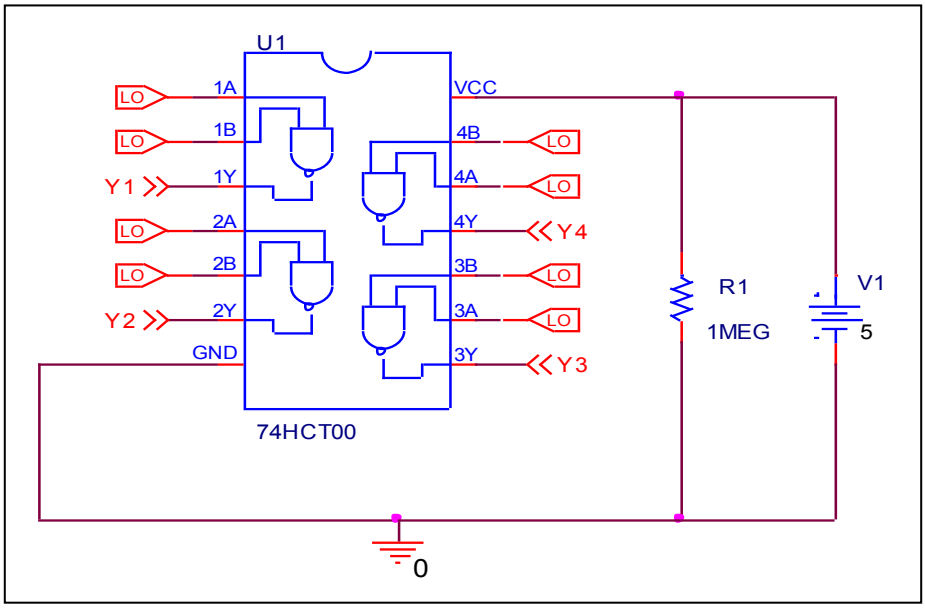

Comparison table

Input		Output		%Error
An	Bn	Yn (Measurement)	Yn (Simulation)	
L	L	H	H	0

All Rights Reserved Copyright (c) Bee Technologies Inc. 2005

Truth Table

Circuit simulation result

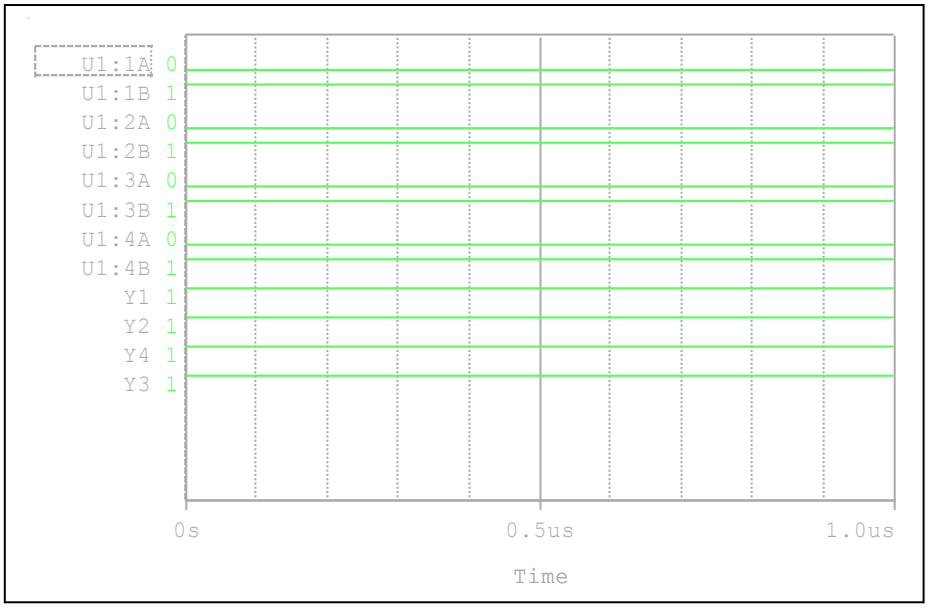

Evaluation circuit

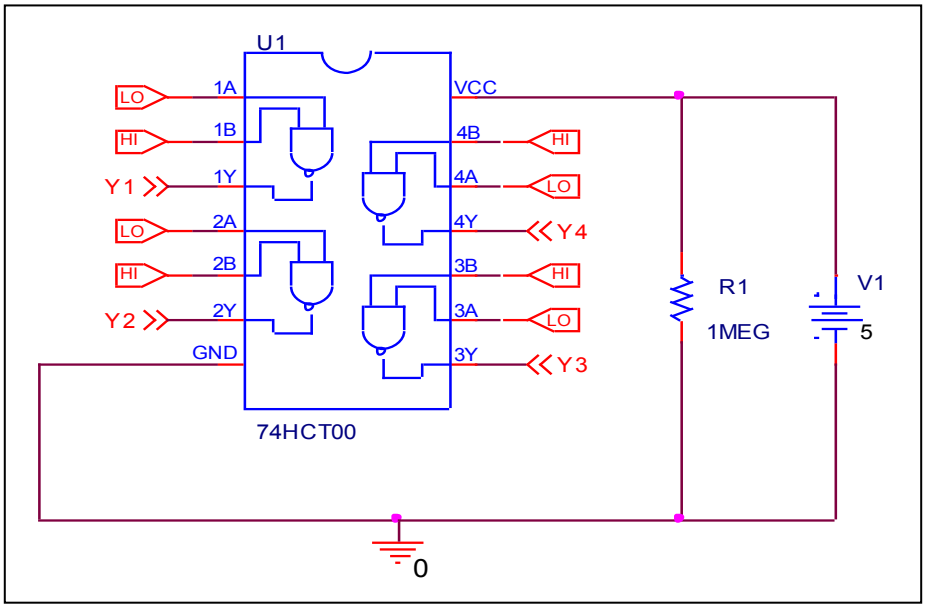

Comparison table

Input		Output		%Error
An	Bn	Yn (Measurement)	Yn (Simulation)	
L	H	H	H	0

All Rights Reserved Copyright (c) Bee Technologies Inc. 2005

Truth Table

Circuit simulation result

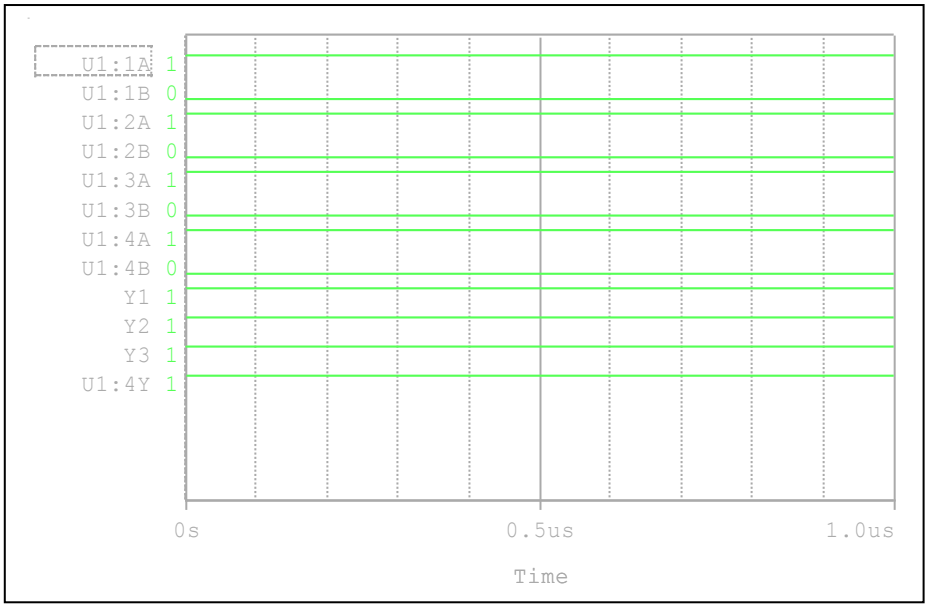

Evaluation circuit

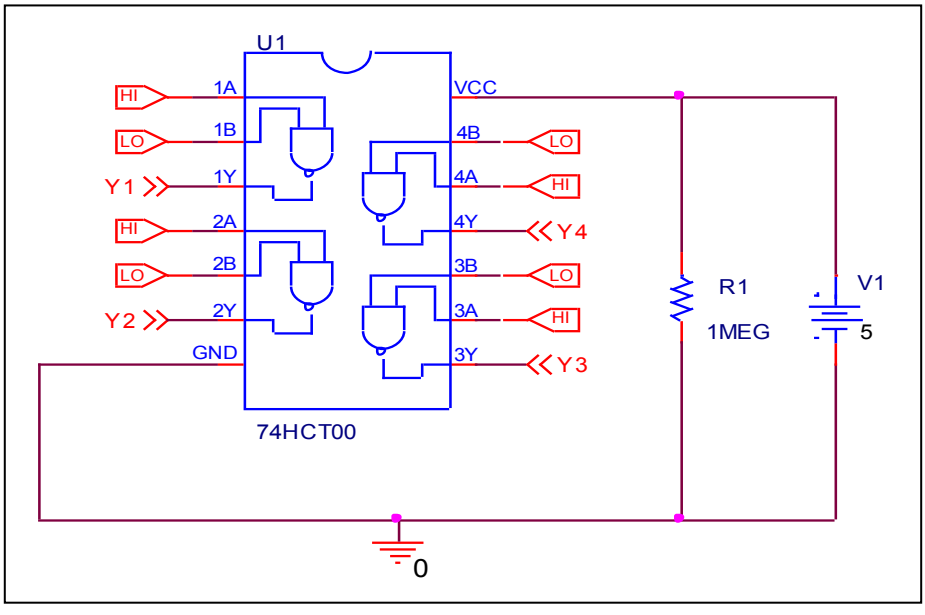

Comparison table

Input		Output		%Error
An	Bn	Yn (Measurement)	Yn (Simulation)	
H	L	H	H	0

All Rights Reserved Copyright (c) Bee Technologies Inc. 2005

Truth Table

Circuit simulation result

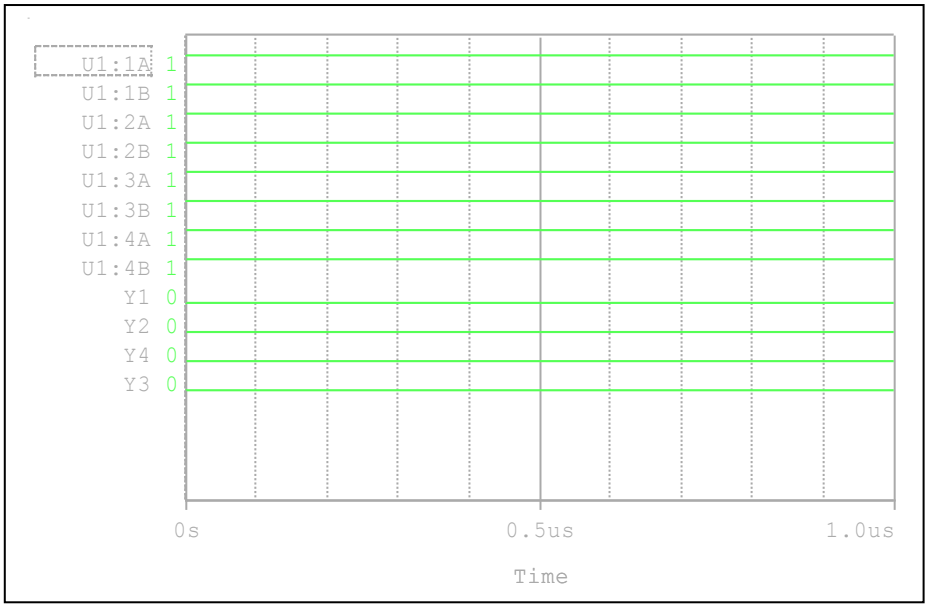

Evaluation circuit

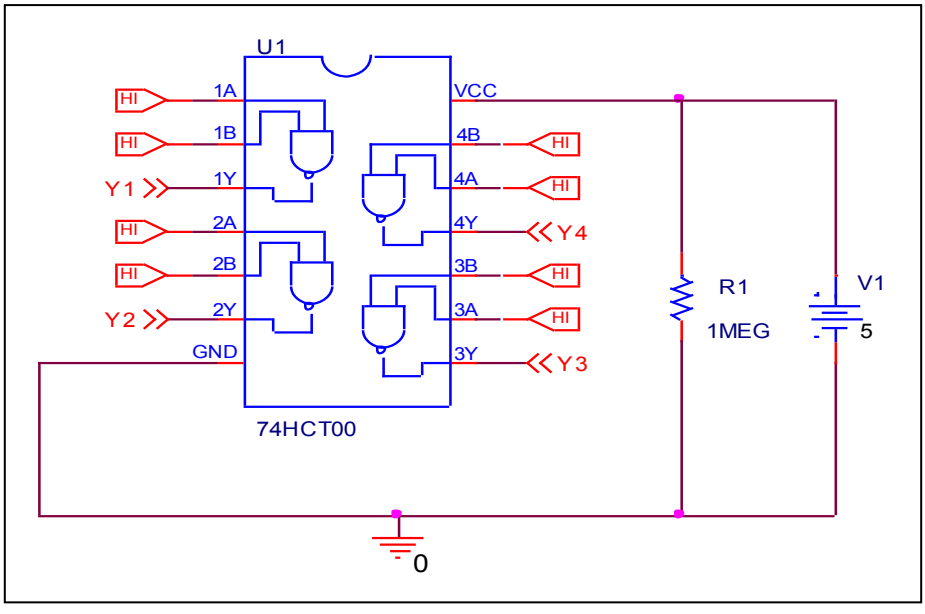

Comparison table

Input		Output		%Error
An	Bn	Yn (Measurement)	Yn (Simulation)	
H	H	L	L	0

All Rights Reserved Copyright (c) Bee Technologies Inc. 2005

High Level and Low Level Input Voltage

Circuit simulation result

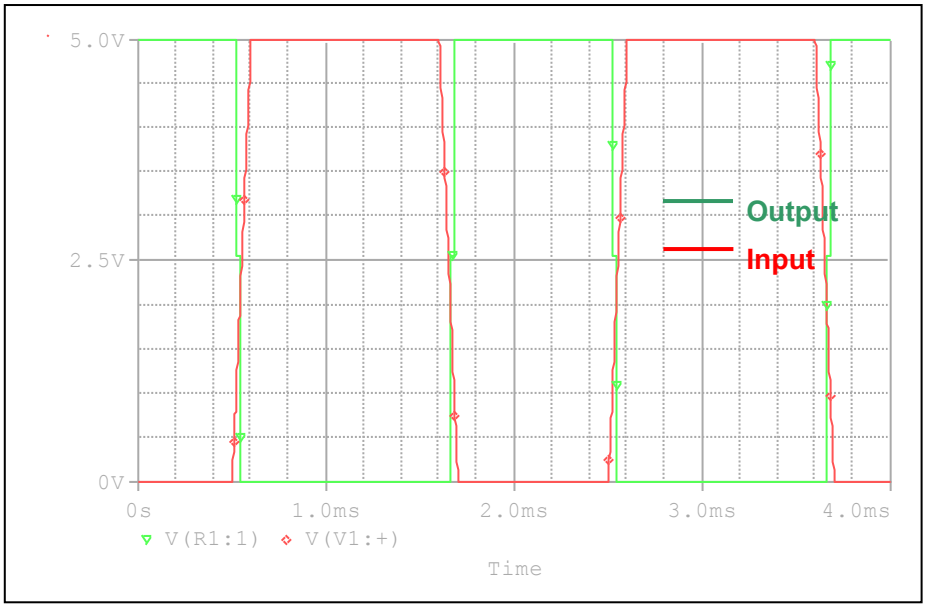

Evaluation circuit

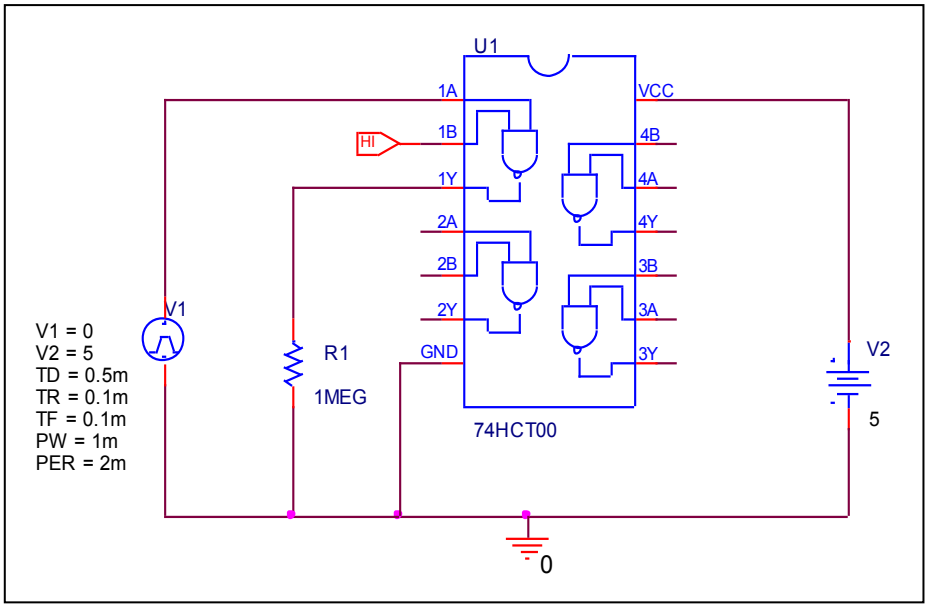

Comparison table

V_{CC} = 5V	Measurement	Simulation	%Error
V_{IH} (V)	2	2	0
V_{IL} (V)	0.8	0.799234	-0.096

All Rights Reserved Copyright (c) Bee Technologies Inc. 2005

High Level and Low Level Output Voltage

Circuit simulation result

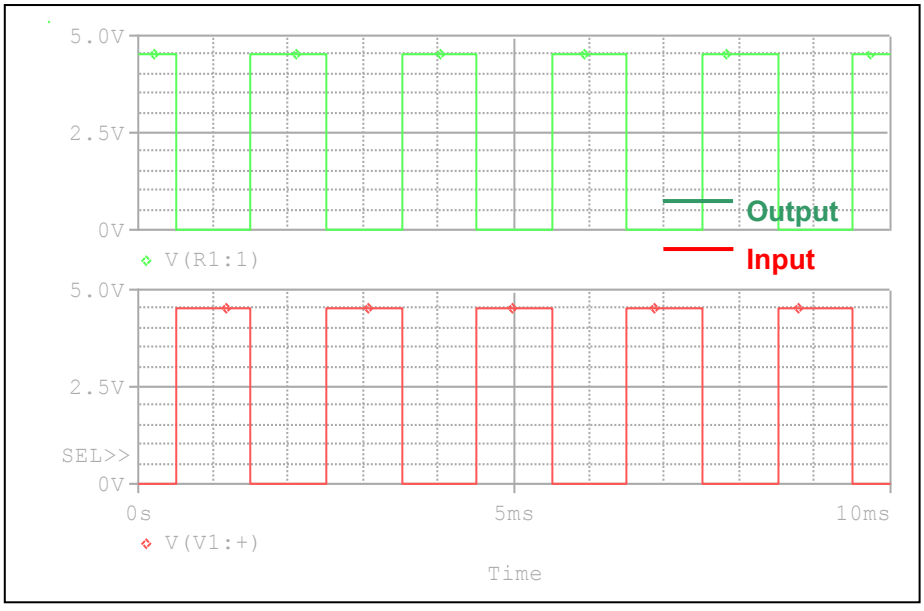

Evaluation circuit

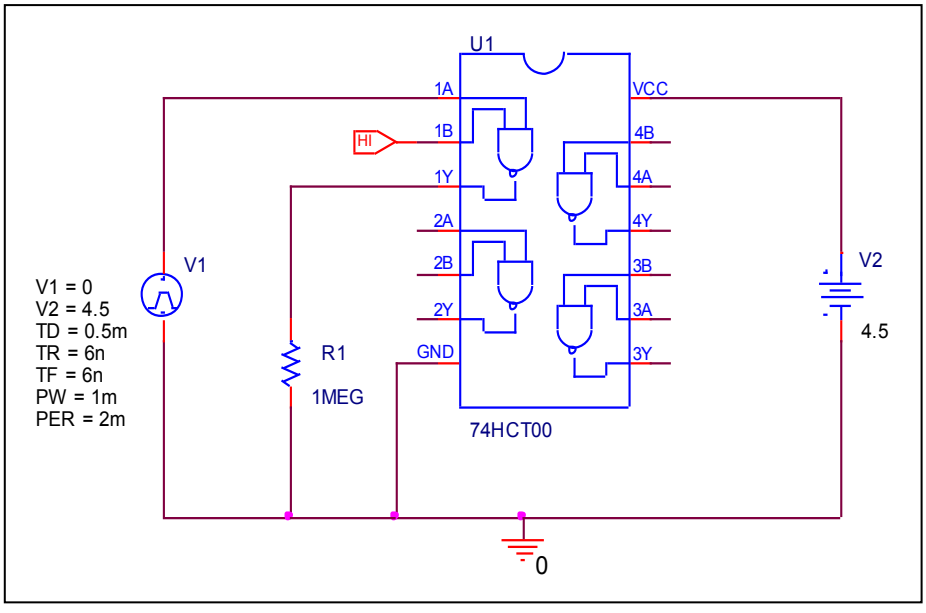

Comparison table

V_{CC} = 4.5V	Measurement	Simulation	%Error
V_{OH} (V)	4.5	4.4977	-0.051
V_{OL} (V)	0	0	0

All Rights Reserved Copyright (c) Bee Technologies Inc. 2005

Propagation Delay Time

Circuit simulation result

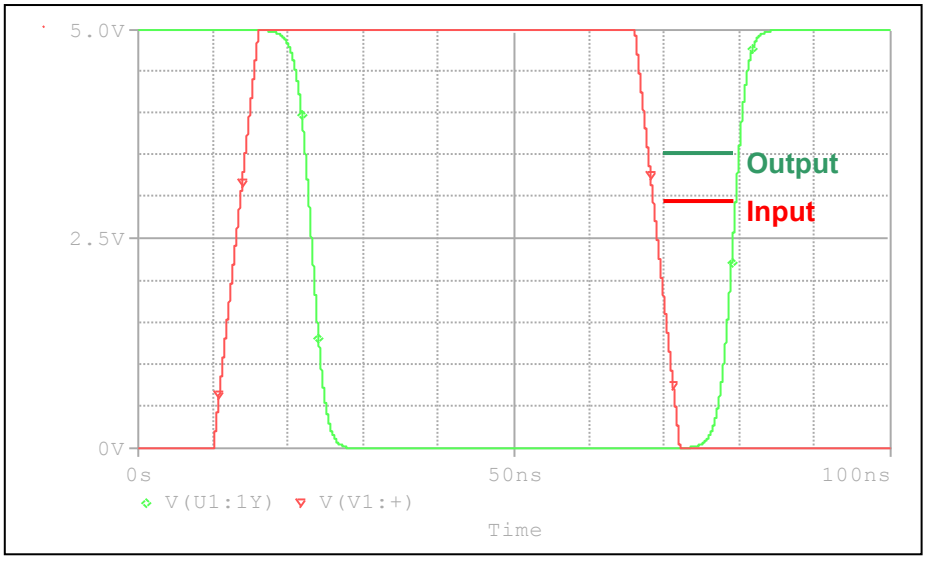

Evaluation circuit

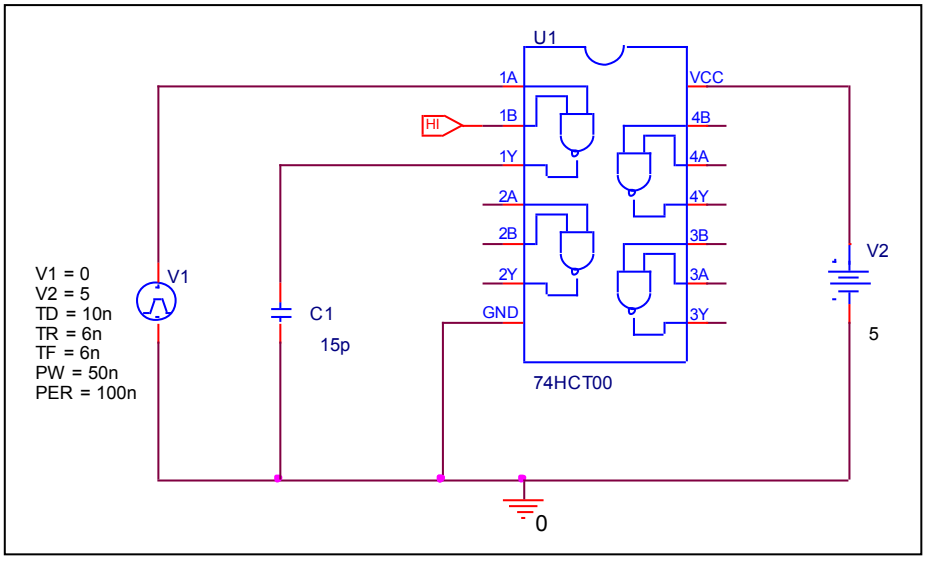

Comparison table

C_L=15pF,V_{CC}= 5V,t_r=t_f=6ns	Measurement	Simulation	%Error
t_{TLH} (ns)	4	4.0133	0.333
t_{THL} (ns)	4	4.0011	0.028
T_{pLH} (ns)	10	10.072	0.720
T_{pHL} (ns)	10	10.041	0.410

All Rights Reserved Copyright (c) Bee Technologies Inc. 2005