Device Modeling Report

COMPONENTS : CMOS DIGITAL INTEGRATED CIRCUIT
PART NUMBER : TC74HC02AFN
MANUFACTURER : TOSHIBA

Bee Technologies Inc.

All Rights Reserved Copyright (c) Bee Technologies Inc. 2005

Truth Table

Circuit simulation result

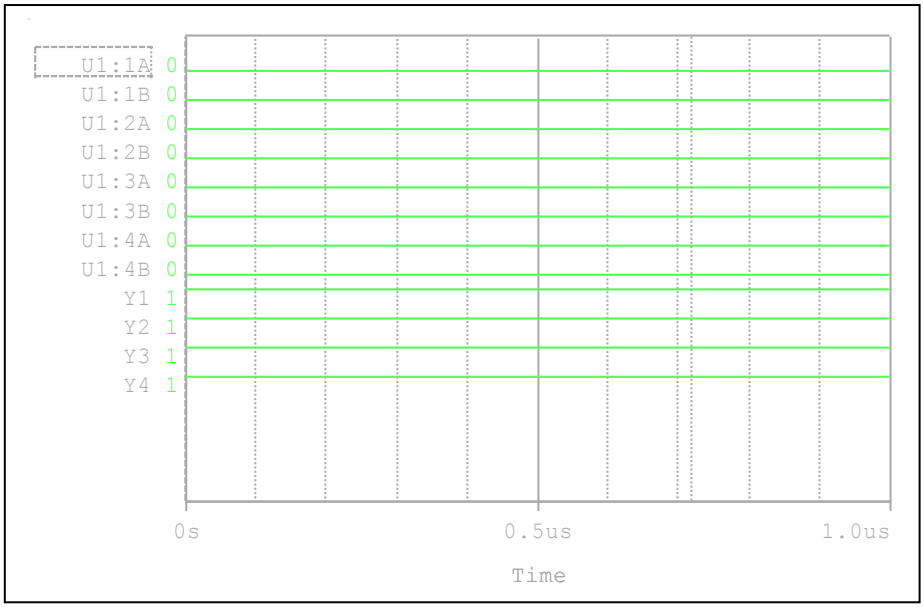

Evaluation circuit

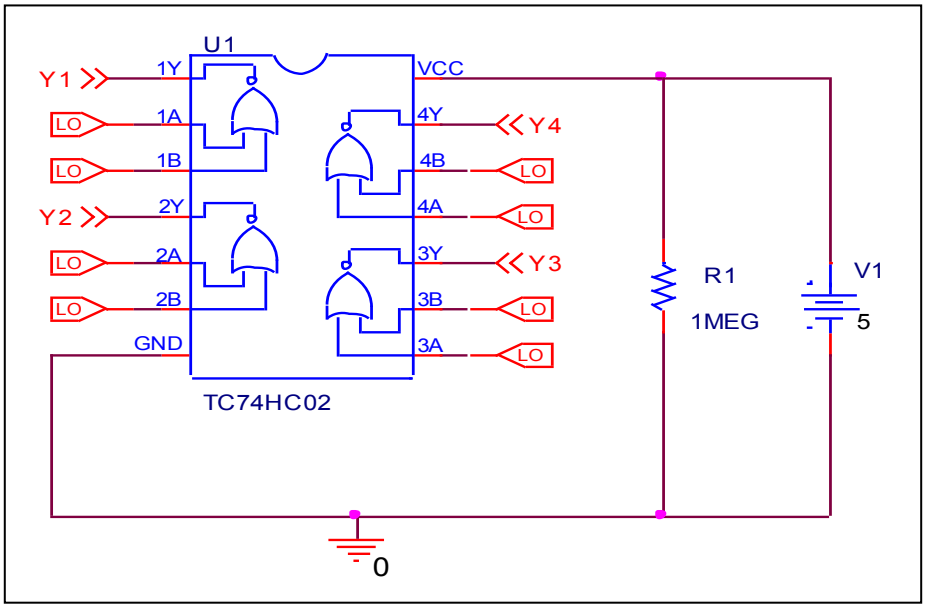

Comparison table

Input		Output		%Error
An	Bn	Yn (Measurement)	Yn (Simulation)	
L	L	H	H	0

All Rights Reserved Copyright (c) Bee Technologies Inc. 2005

Truth Table

Circuit simulation result

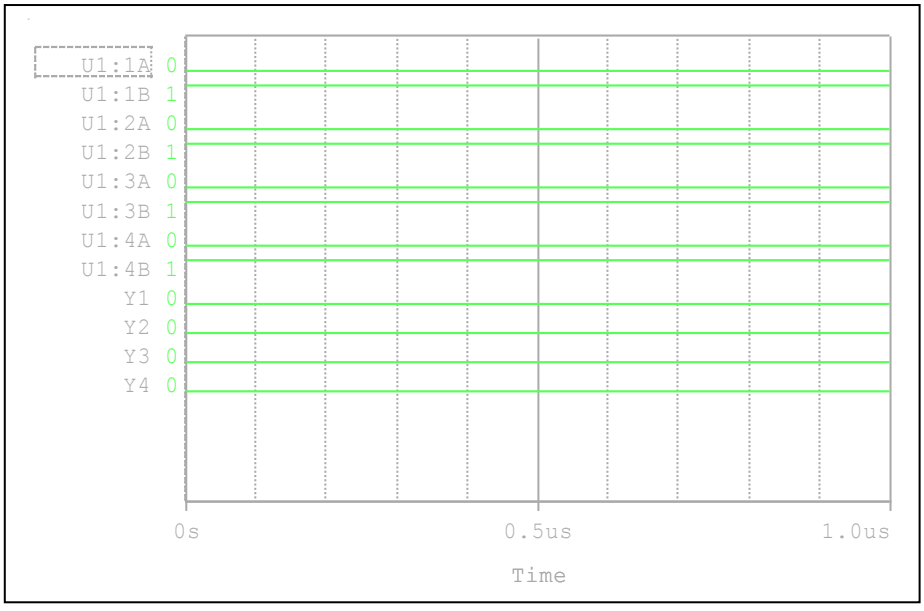

Evaluation circuit

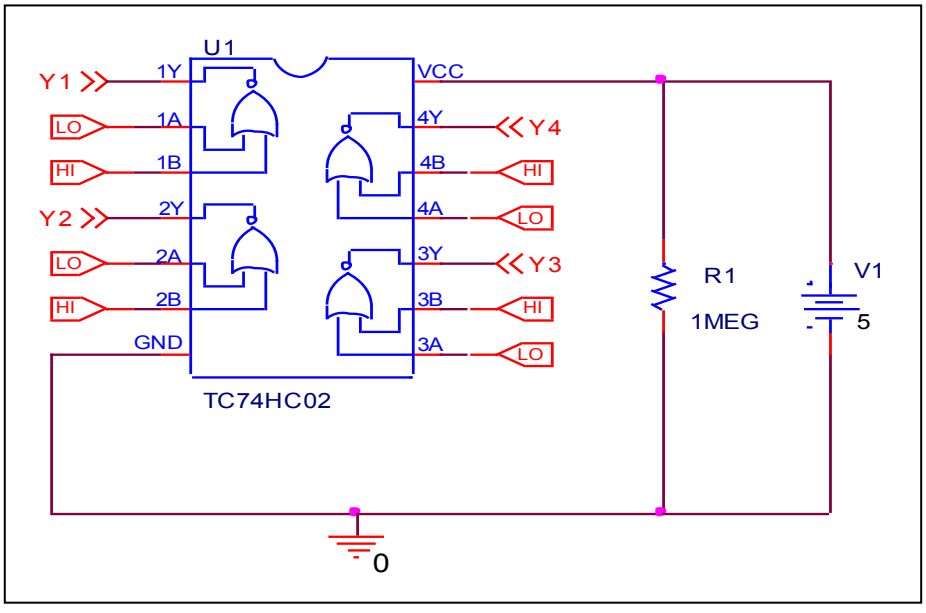

Comparison table

Input		Output		%Error
An	Bn	Yn (Measurement)	Yn (Simulation)	
L	H	L	L	0

All Rights Reserved Copyright (c) Bee Technologies Inc. 2005

Truth Table

Circuit simulation result

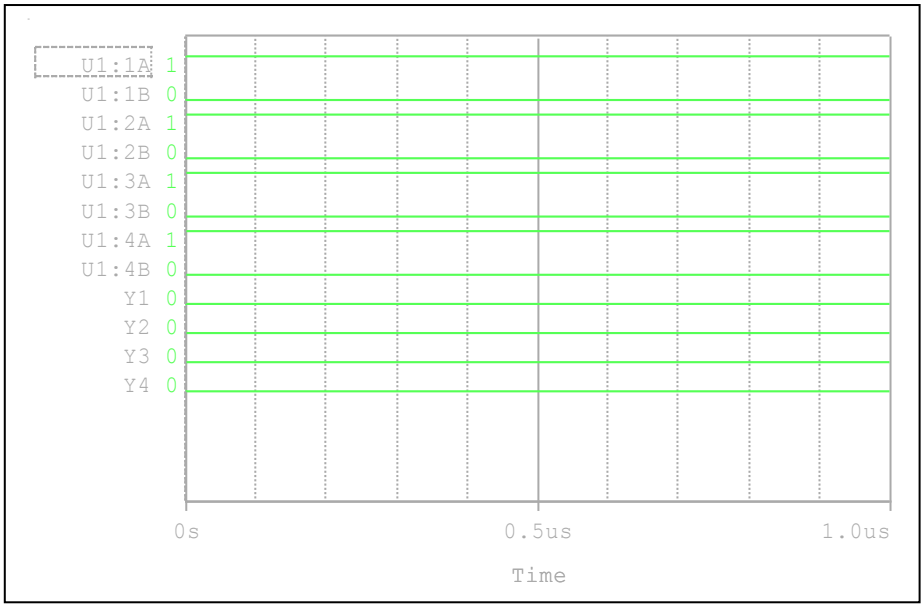

Evaluation circuit

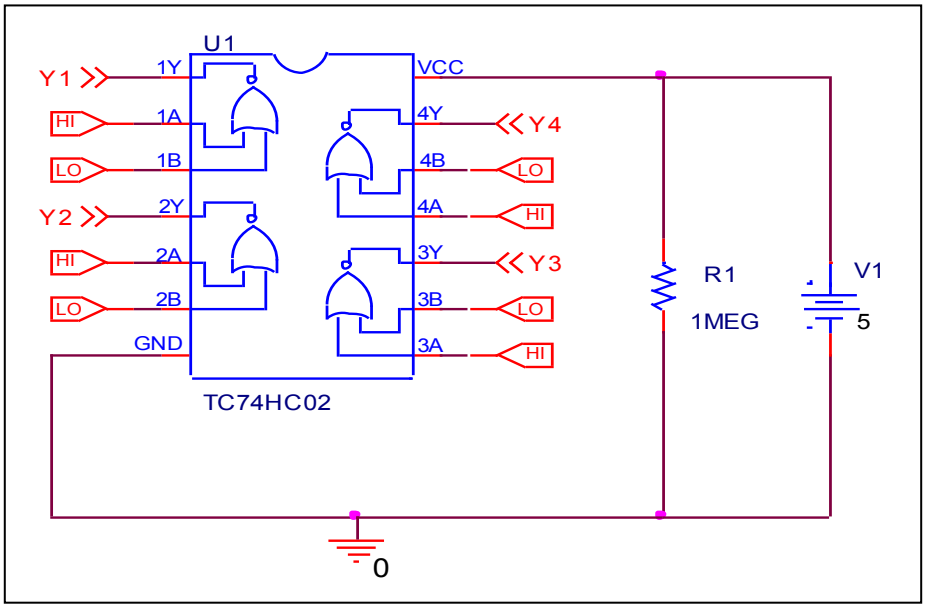

Comparison table

Input		Output		%Error
An	Bn	Yn (Measurement)	Yn (Simulation)	
H	L	L	L	0

All Rights Reserved Copyright (c) Bee Technologies Inc. 2005

Truth Table

Circuit simulation result

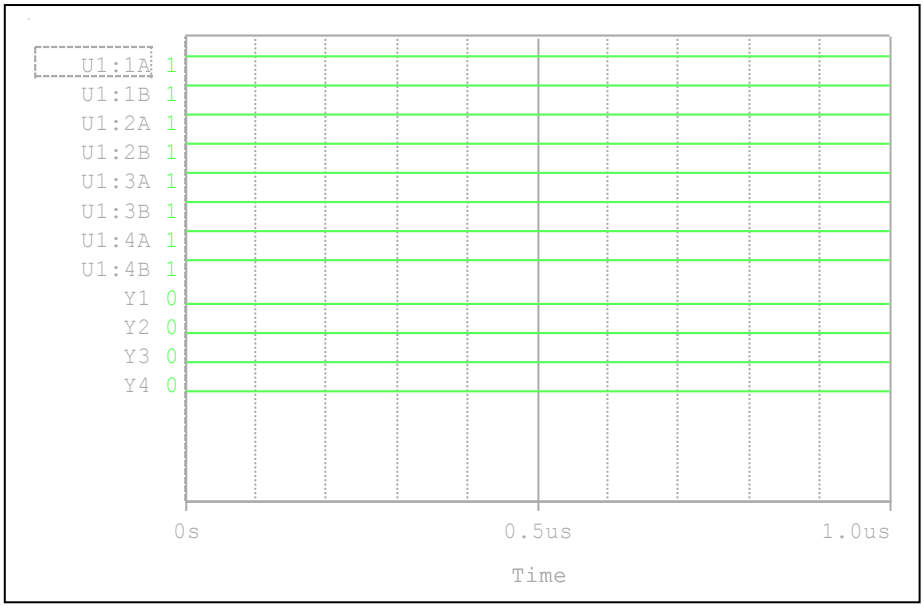

Evaluation circuit

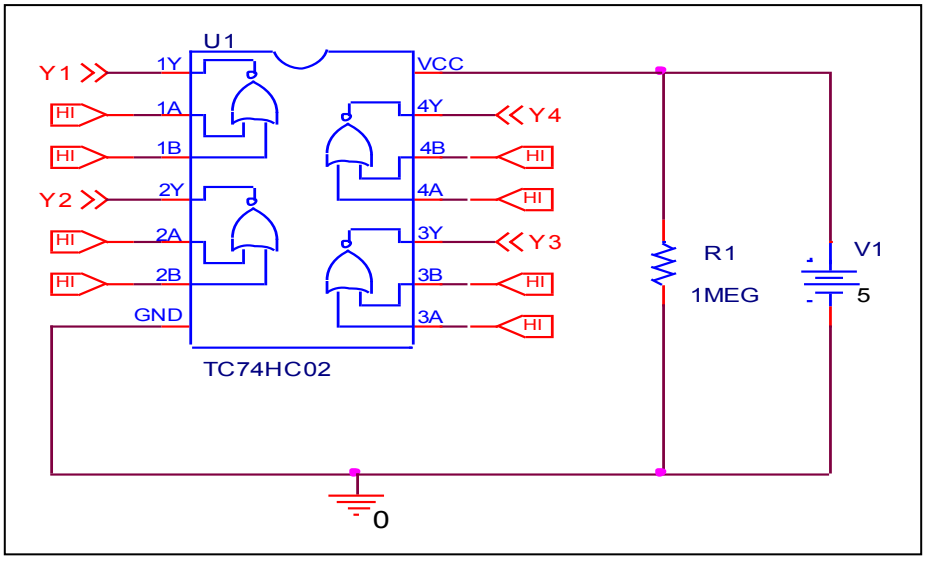

Comparison table

Input		Output		%Error
An	Bn	Yn (Measurement)	Yn (Simulation)	
H	H	L	L	0

All Rights Reserved Copyright (c) Bee Technologies Inc. 2005

High Level and Low Level Input Voltage

Circuit simulation result

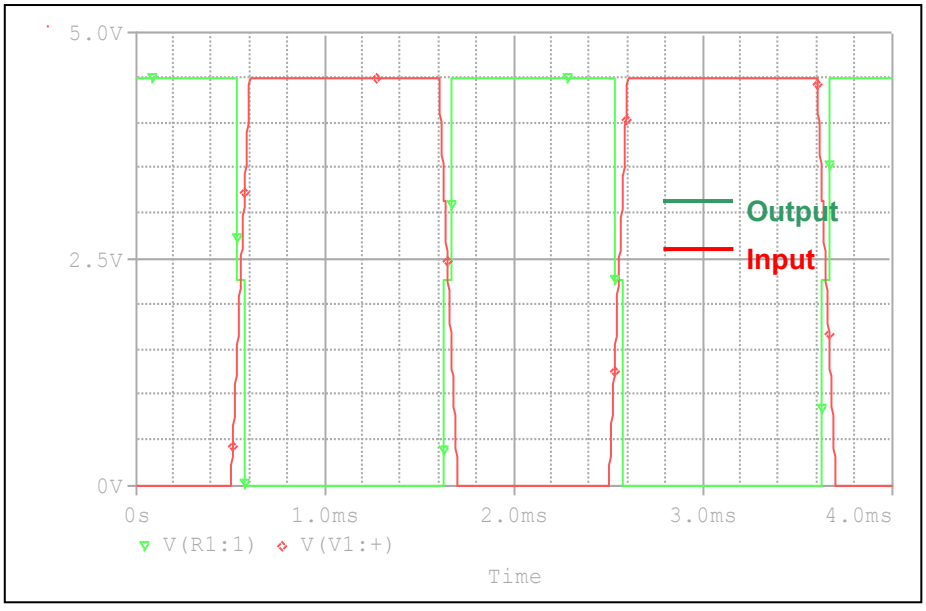

Evaluation circuit

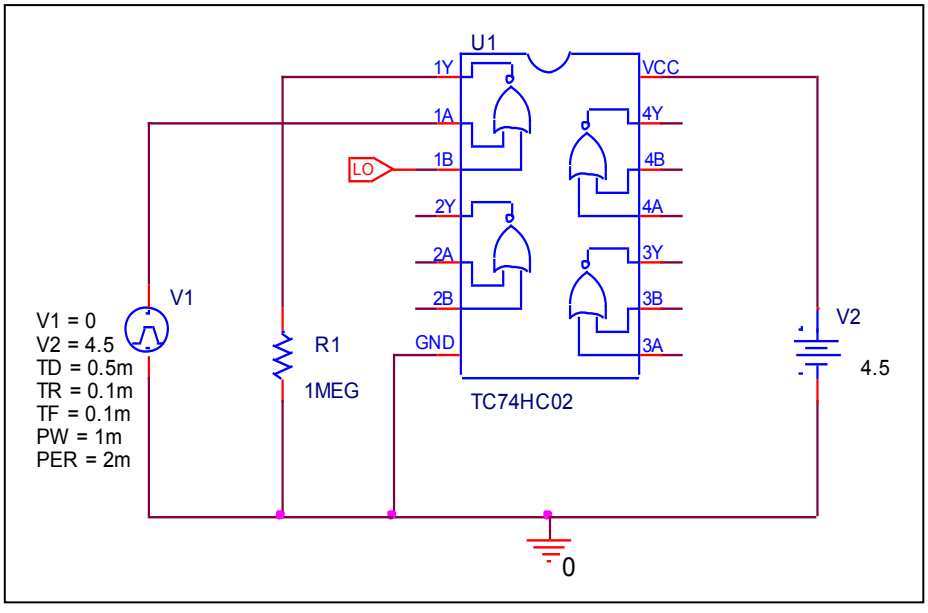

Comparison table

V_{CC} = 4.5V	Measurement	Simulation	%Error
V_{IH} (V)	3.15	3.1507	0.022
V_{IL} (V)	1.35	1.3452	-0.356

All Rights Reserved Copyright (c) Bee Technologies Inc. 2005

High Level and Low Level Output Voltage

Circuit simulation result

Evaluation circuit

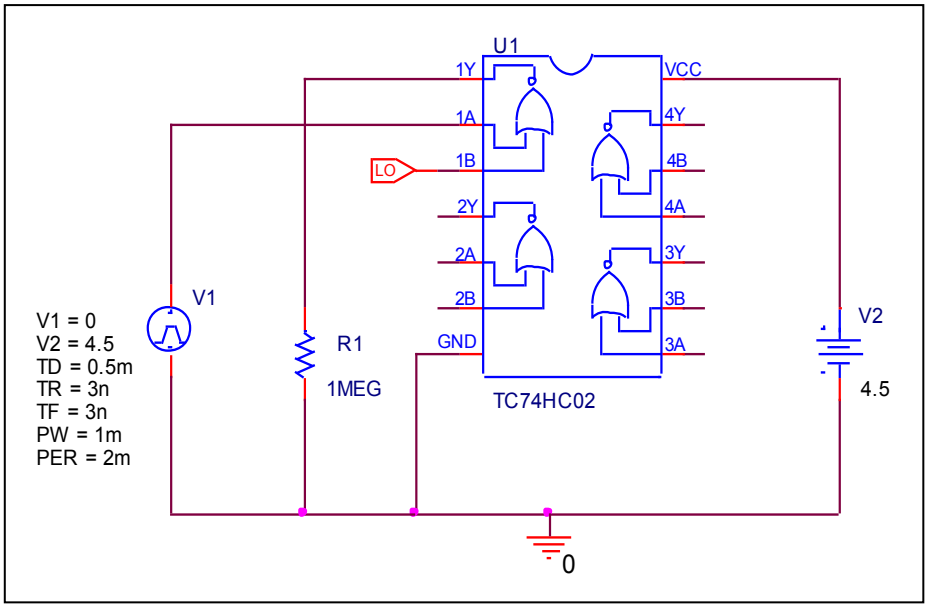

Comparison table

V_{CC} = 4.5V	Measurement	Simulation	%Error
V_{OH} (V)	4.5	4.4975	-0.056
V_{OL} (V)	0	0	0

All Rights Reserved Copyright (c) Bee Technologies Inc. 2005

Propagation Delay Time

Circuit simulation result

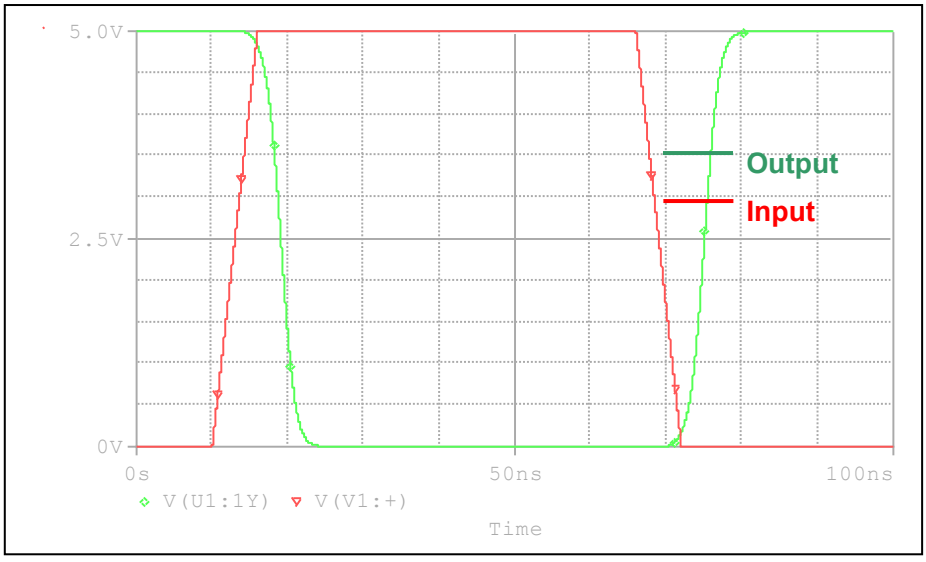

Evaluation circuit

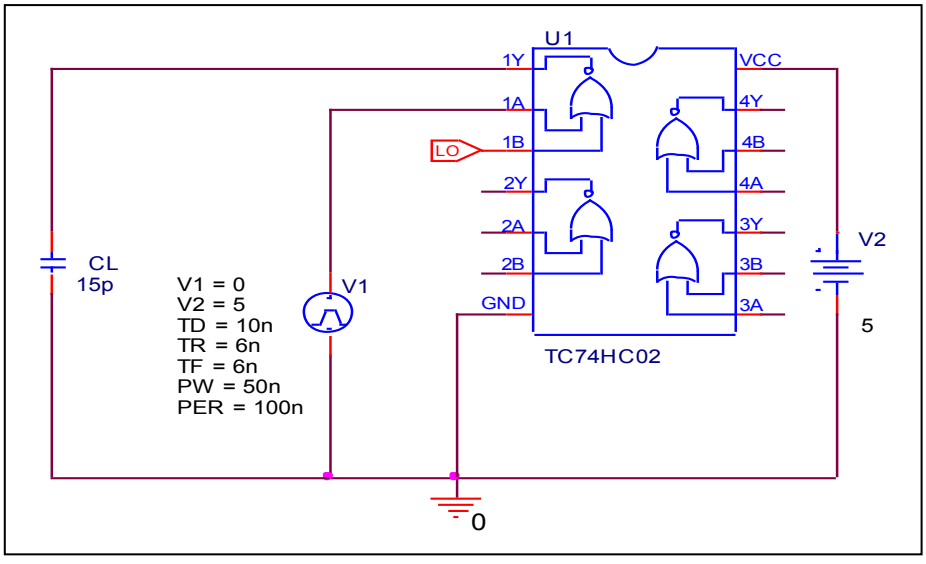

Comparison table

C_L=15pF,V_{CC} = 5V,tr=tf=6ns	Measurement	Simulation	%Error
t_{TLH} (ns)	4	4.0836	2.090
t_{THL} (ns)	4	4.0476	1.190
T_{pLH} (ns)	6	6.0554	0.923
T_{pHL} (ns)	6	6.0655	1.092

All Rights Reserved Copyright (c) Bee Technologies Inc. 2005