ITEM NO.	PART NUMBER	DESCRIPTION	QTY.	COMPONENT NOTES
1	TLY-13	NEMA 5-15P	1	white overmold
2	30-00245	Wire, 3C, 18 AWG, UL SVT, 300V, 105C, 6.3 mm, VW-1, PVC, white	1	

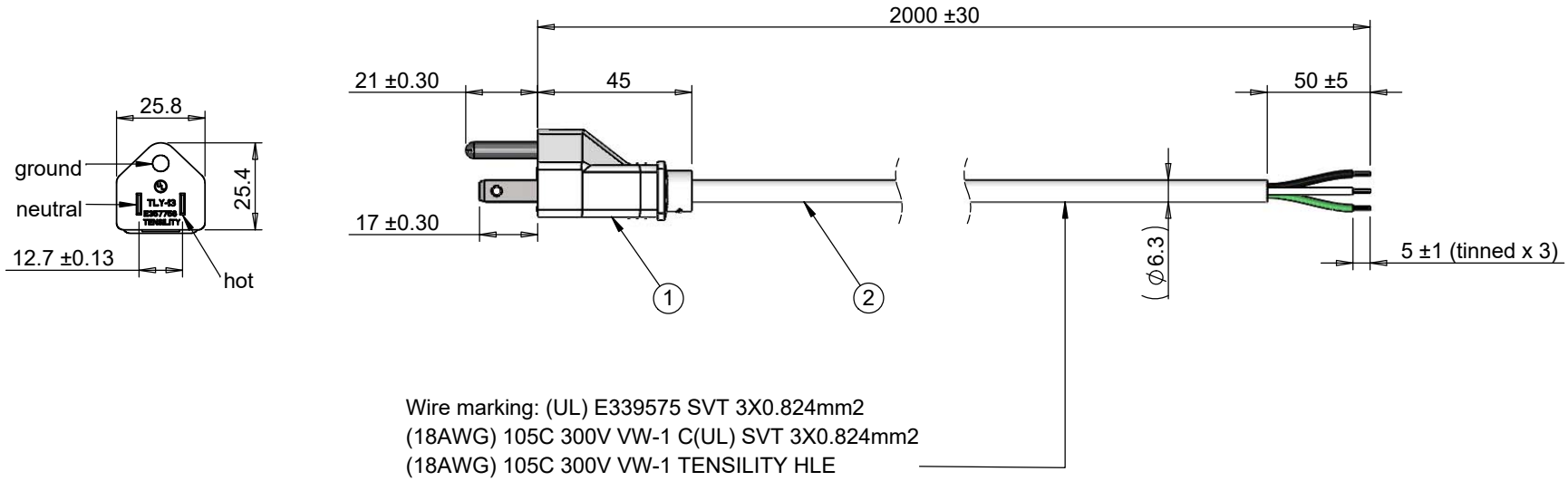

Wiring Diagram	
TLY-13	wire color
hot	black
neutral	white
ground	green

Notes:
Electrical requirements: 10 A at 125 Vac

Revision:	Date:	Description:
A	12/18/2016	Initial release

Prepared: DN — Digitally signed by DN Date: 2017.01.26 11:50:36 -08'00'

Verified: PS — Digitally signed by PS Date: 2017.01.26 16:04:20 -08'00'

Dimensions are in millimeters.
Tolerances:
X: ± 0.5 mm
X.X: ± 0.3 mm
X.XX: ± 0.05 mm

Notes:
RoHS and REACH compliant

Function test: no open, no short circuit, no intermittent

Description:
Ac cord, 2000 mm, U.S, NEMA 5-15P plug, TLY-13 to tinned, 18 AWG, SVT wire, 30-00245, white

TENSILITY
tel 1.541.323.3228 800 877.670.7118
fax 1.541.323.4202 web tensility.com

Size: A
Part number: 11-00028
Scale: 1:2
Sheet 1 of 1

5 4 3 2 1