Date	SYM	REVISION RECORD	AUTH	DR.	CK.
5/26/07	A	Added test results	T.B.	B.S.	
9/04/08	B	Updated pos. and neg. sign	T.B.	B.S.	
9/12/14	C	Dim. 54.49 was 55.20 Added dim. 14.97 Updated to ROHS 2 Compliant	T.B.	B.S.	
07/14/16	D	ADDED CONTACT DIM. 1.01 AND 0.30	T.B.	B.S.	

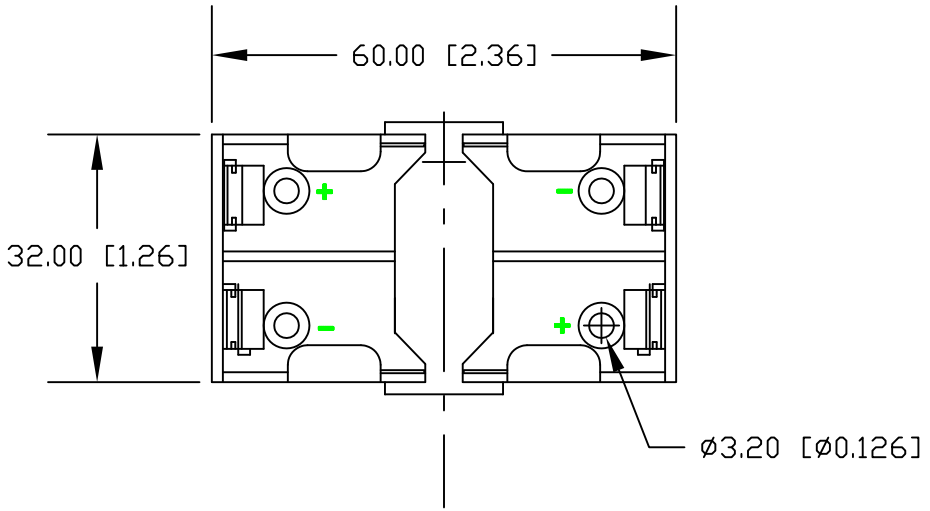

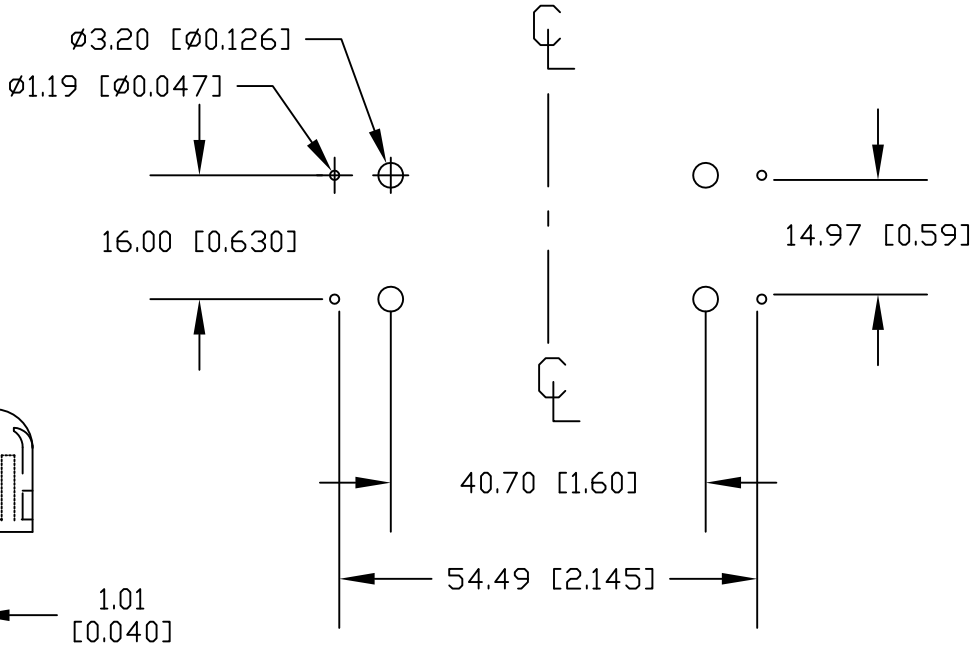

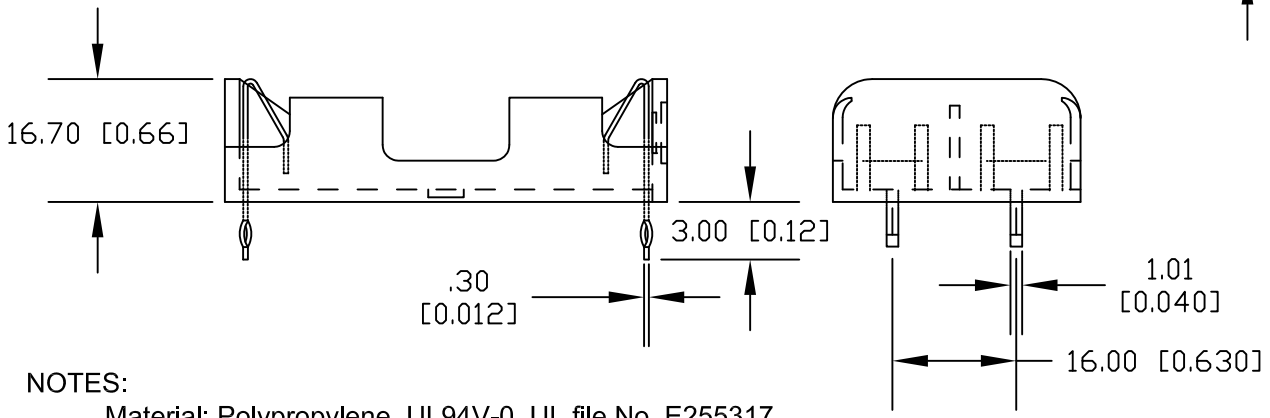

PCB LAYOUT

NOTES:

Material: Polypropylene, UL94V-0, UL file No. E255317
Contacts: 302 Stainless Steel Spring Temper, Nickel Plated
Cover: Polypropylene, UL94V-0
Heat Deflection Temperature: 90°C
Vibration Test: 10-50-10 Hz sweeped in 60 seconds
X,Y,Z direction: 1 hour each direction
Result: No dislodgement of the cell or damage
No discontinuity over 10 micro-seconds
Shock Test: Half sine wave acceleration 150G. 6 m/s
3 shock pulses each direction per axis, total of 18 pulses
Result: No evidence of physical damage.
ROHS 2 COMPLIANT

Tolerance (Inches)	MPD Memory Protection Devices, Inc 200 Broad Hollow Road, Farmingdale, New York 11735		
Decimal ±.5 (.020)		Scale	Drawn By B.S. Approved By T.B.
Fractional ± .8 (.030)	Title 2 "AA" BATTERY HOLDER FOR MEMORY BACKUP		
Angular ± 3°	Date 07/14/16	Drawing Number BK-6100-PC4	