LMK03318 Ultra-Low-Noise Jitter Clock Generator Family with One PLL, Eight Outputs, Integrated EEPROM

1 Features

- Ultra-Low Noise, High Performance
  - Jitter: 100-fs RMS Typical, F_{OUT} > 100 MHz
  - PSNR: –80 dBc, Robust Supply Noise Immunity
- Flexible Device Options
  - Up to 8 AC-LVPECL, AC-LVDS, AC-CML, HCSL or LVCMOS Outputs or Any Combination
  - Pin Mode, I^2C Mode, EEPROM Mode
  - 71-Pin Selectable Pre-programmed Default Start-up Options
- Dual Inputs with Automatic or Manual Selection
  - Crystal Input: 10 to 52 MHz
  - External Input: 1 to 300 MHz
- Frequency Margining Options
  - Fine frequency Margining Using Low-Cost Pullable Crystal Reference
  - Glitchless Coarse Frequency Margining (%) Using Output Dividers
- Other Features
  - Supply: 3.3 V Core, 1.8 V, 2.5 V, or 3.3 V Output Supply
  - Industrial Temperature Range (–40ºC to 85ºC)

2 Applications

- Switches and Routers
- Network and Telecom Line Cards
- Servers and Storage Systems
- Wireless Base Station

3 Description

The LMK03318 is an ultra-low-noise PLLatinum™ clock generator with one fractional-N frequency synthesizer with integrated VCO, flexible clock distribution/fanout, and pin-selectable configuration states stored in on-chip EEPROM. The device can generate multiple clocks for various multi-gigabit serial interfaces and digital devices, thus reducing BOM cost and board area and improving reliability by replacing multiple oscillators and clock distribution devices. The ultra-low jitter reduces bit-error rate (BER) in high-speed serial links.

Device Information(1)

PART NUMBER	PACKAGE	BODY SIZE (NOM)
LMK03318	WQFN (48)	7.00 mm × 7.00 mm

(1) For all available packages, see the orderable addendum at the end of the data sheet.

LMK03318 Simplified Block Diagram

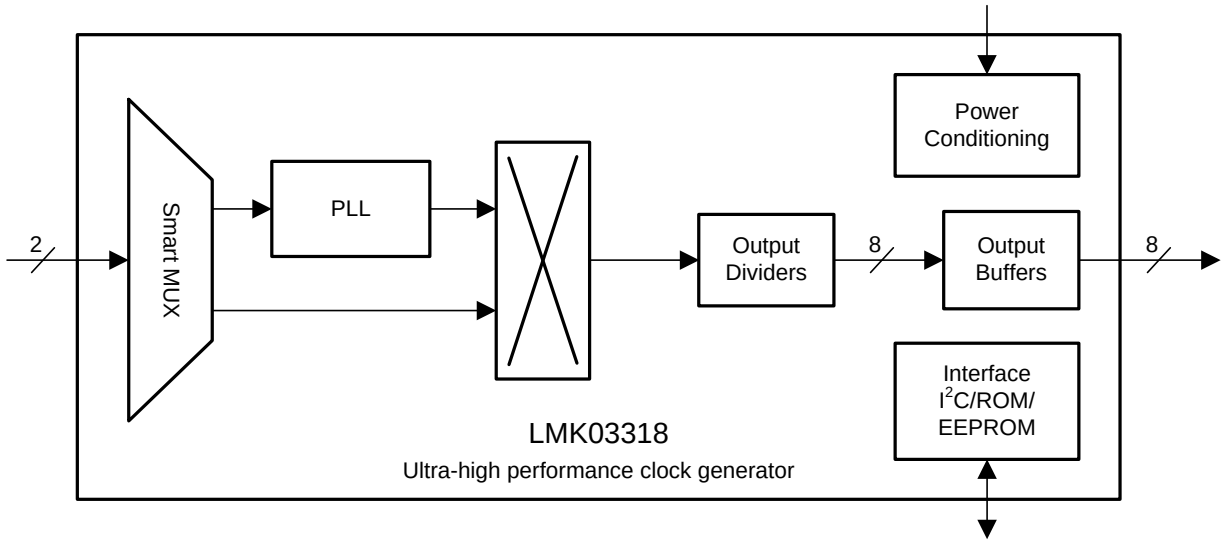

An IMPORTANT NOTICE at the end of this data sheet addresses availability, warranty, changes, use in safety-critical applications, intellectual property matters and other important disclaimers. PRODUCTION DATA.

Table of Contents

1 Features ... 1
2 Applications ... 1
3 Description ... 1
4 Revision History ... 2
5 Description Continued ... 3
6 Device Comparison Table ... 3
7 Pin Configuration and Functions ... 4
8 Specifications ... 7
8.1 Absolute Maximum Ratings ... 7
8.2 ESD Ratings ... 7
8.3 Recommended Operating Conditions ... 7
8.4 Thermal Information ... 7
8.5 Thermal Information ... 8
8.6 Electrical Characteristics - Power Supply ... 8
8.7 Pullable Crystal Characteristics (SECREF_P, SECREF_N) ... 9
8.8 Non-Pullable Crystal Characteristics (SECREF_P, SECREF_N) ... 10
8.9 Clock Input Characteristics (PRIREF_P/PRIREF_N, SECREF_P/SECREF_N) ... 10
8.10 VCO Characteristics ... 10
8.11 PLL Characteristics ... 11
8.12 1.8-V LVCMOS Output Characteristics (OUT[7:0]) ... 11
8.13 LVCMOS Output Characteristics (STATUS[1:0] ... 11
8.14 Open-Drain Output Characteristics (STATUS[1:0]) ... 12
8.15 AC-LVPECL Output Characteristics ... 12
8.16 AC-LVDS Output Characteristics ... 12
8.17 AC-CML Output Characteristics ... 13
8.18 HCSL Output Characteristics ... 13
8.19 Power-On/Reset Characteristics ... 13
8.20 2-Level Logic Input Characteristics (HW_SW_CTRL, PDN, GPIO[5:0]) ... 14
8.21 3-Level Logic Input Characteristics (REFSEL, GPIO[3:1]) ... 14
8.22 Analog Input Characteristics (GPIO[5]) ... 14
8.23 I^2C-Compatible Interface Characteristics (SDA, SCL) ... 15
8.24 Typical 156.25 MHz Closed-Loop Output Phase Noise Characteristics ... 15
8.25 Typical 161.1328125 MHz Closed-Loop Output Phase Noise Characteristics ... 16
8.26 Closed-Loop Output Jitter Characteristics ... 16
8.27 Typical Power Supply Noise Rejection Characteristics ... 17
8.28 Typical Power-Supply Noise Rejection Characteristics ... 17
8.29 Typical Closed-Loop Output Spur Characteristics 17
8.30 Typical Characteristics ... 18
9 Parameter Measurement Information ... 22
9.1 Test Configurations ... 22
10 Detailed Description ... 26
10.1 Overview ... 26
10.2 Functional Block Diagram ... 26
10.3 Feature Description ... 27
10.4 Device Functional Modes ... 31
10.5 Programming ... 49
10.6 Register Maps ... 70
10.7 EEPROM Map ... 110
11 Application and Implementation ... 116
11.1 Application Information ... 116
11.2 Typical Applications ... 116
12 Power Supply Recommendations ... 126
12.1 Device Power Up Sequence ... 126
12.2 Device Power Up Timing ... 127
12.3 Power Down ... 128
12.4 Power Rail Sequencing, Power Supply Ramp Rate, and Mixing Supply Domains ... 128
12.5 Power Supply Bypassing ... 130
13 Layout ... 131
13.1 Layout Guidelines ... 131
14 Device and Documentation Support ... 133
14.1 Device Support ... 133
14.2 Receiving Notification of Documentation Updates ... 133
14.3 Community Resources ... 133
14.4 Trademarks ... 133
14.5 Electrostatic Discharge Caution ... 133
14.6 Glossary ... 133
15 Mechanical, Packaging, and Orderable Information ... 133

4 Revision History

Changes from Revision A (December 2015) to Revision B	Page
• Changed title from Configuring the PLL to Device Functional Modes	31
• Changed title from Interface and Control to Programming	49
• Added new sections to Power Supply Recommendations	128

Copyright © 2015–2016, Texas Instruments Incorporated

5 Description Continued

For the PLL, a differential/single-ended clock or crystal input can be selected as its reference clock. The selected reference input can be used to lock the VCO frequency at an integer or fractional multiple of the reference input frequency. The VCO frequency can be tuned between 4.8 GHz and 5.4 GHz. The PLL offers the flexibility to select a predefined or user-defined loop bandwidth, depending on the needs of the application. The PLL has a post-divider that can be selected between divide-by 2, 3, 4, 5, 6, 7 or 8.

All the output channels can select the divided-down VCO clock from the PLL as the source for the output divider to set the final output frequency. Some output channels can also independently select the reference input for the PLL as an alternative source to be bypassed to the corresponding output buffers. The 8-bit output dividers support a divide range of 1 to 256 (even or odd), output frequencies up to 1 GHz, and output phase synchronization capability.

All output pairs are ground-referenced CML drivers with programmable swing that can be interfaced to LVDS, LVPECL or CML receivers with AC coupling. All output pairs can also be independently configured as HCSL outputs or 2 × 1.8-V LVCMOS outputs. The outputs offer lower power at 1.8 V, higher performance and power supply noise immunity, and lower EMI compared to voltage-referenced driver designs (such as traditional LVDS and LVPECL drivers). Two additional 3.3-V LVCMOS outputs can be obtained via the STATUS pins. This is an optional feature in case of a need for 3.3-V LVCMOS outputs and device status signals are not needed.

The device features self start-up from on-chip programmable EEPROM or pre-defined ROM memory, which offers multiple custom device modes selectable via pin control eliminating the need for serial programming. The device registers and on-chip EEPROM settings are fully programmable via the I^2C-compatible serial interface. The device slave address is programmable in EEPROM and LSBs can be set with a 3-state pin.

The device provides two frequency margining options with glitch-free operation to support system design verification tests (DVT), such as standard compliance and system timing margin testing. Fine frequency margining (in ppm) can be supported by using a low-cost pullable crystal on the internal crystal oscillator (XO), and selecting this input as the reference to the PLL synthesizer. The frequency margining range is determined by the crystal's trim sensitivity and the on-chip varactor range. XO frequency margining can be controlled through pin or I^2C control for ease-of use and high flexibility. Coarse frequency margining (in %) is available on any output channel by changing the output divide value via I^2C interface, which synchronously stops and restarts the output clock to prevent a glitch or runt pulse when the divider is changed.

Internal power conditioning provide excellent power supply noise rejection (PSNR), reducing the cost and complexity of the power delivery network. The analog and digital core blocks operate from 3.3 V ± 5% supply and output blocks operate from 1.8 V, 2.5 V, or 3.3 V ± 5% supply.

6 Device Comparison Table

Table 1. LVPECL Output Jitter over Different Integration Bandwidths

OUTPUT FREQUENCY (MHz)	INTEGRATION BANDWIDTH	TYPICAL JITTER (ps, rms)
< 100	12 kHz - 5 MHz	0.15
> 100	1 kHz – 5 MHz 12 kHz – 20 MHz	0.1

7 Pin Configuration and Functions

RHS Package
48-Pin QFN
Top View

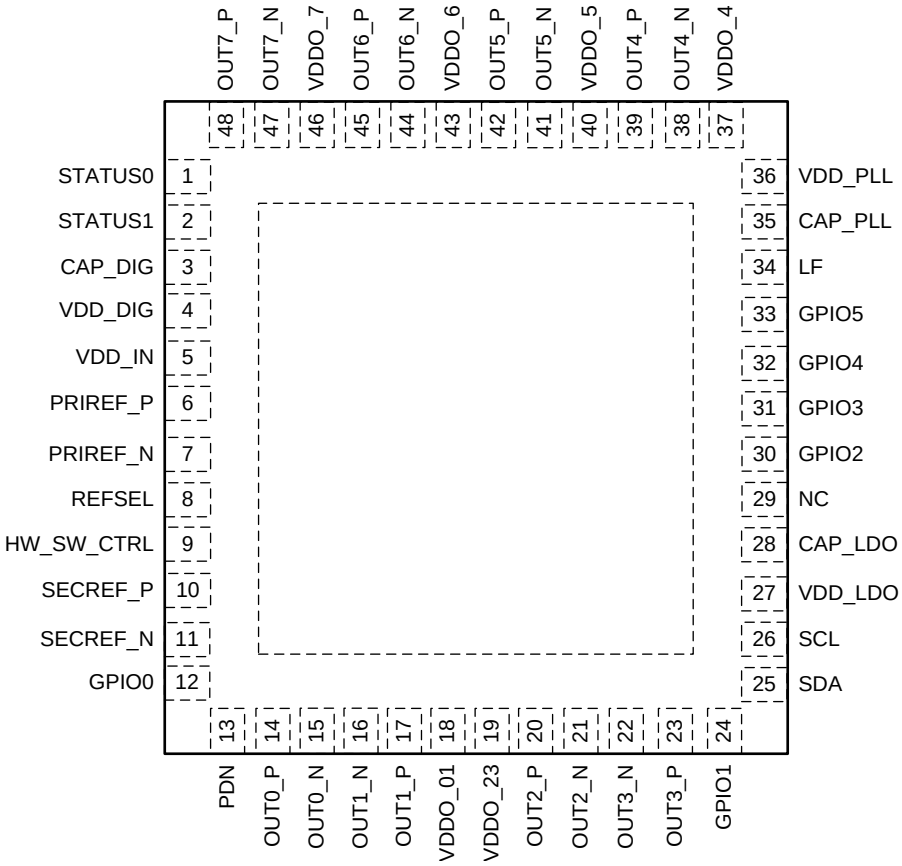

Pin Functions

NO.	NAME	TYPE	DESCRIPTION
POWER			
n/a	DAP	Ground	Die Attach Pad. The DAP is an electrical connection and provides a thermal dissipation path. For proper electrical and thermal performance of the device, a 6 × 6 via pattern (0.3 mm holes) is recommended to connect the DAP to multiple ground layers of the PCB. Refer to *Layout Guidelines*.
4	VDD_DIG	Analog	3.3 V power supply for digital control and STATUS outputs.
5	VDD_IN	Analog	3.3 V power supply for input block.
18	VDDO_01	Analog	1.8 V, 2.5 V, or 3.3 V power supply for OUT0/OUT1 channel.
19	VDDO_23	Analog	1.8 V, 2.5 V, or 3.3 V power supply for OUT2/OUT3 channel.
27	VDD_LDO	Analog	3.3 V power supply for PLL LDO.
36	VDD_PLL	Analog	3.3 V power supply for PLL/VCO.
37	VDDO_4	Analog	1.8 V, 2.5 V, or 3.3 V power supply for OUT4 channel.
40	VDDO_5	Analog	1.8 V, 2.5 V, or 3.3 V power supply for OUT5 channel.
43	VDDO_6	Analog	1.8 V, 2.5 V, or 3.3 V power supply for OUT6 channel.
46	VDDO_7	Analog	1.8 V, 2.5 V, or 3.3 V power supply for OUT7 channel.

Copyright © 2015–2016, Texas Instruments Incorporated

Pin Functions (continued)

NO.	NAME	TYPE	DESCRIPTION
INPUT BLOCK			
6, 7	PRIREF_P, PRIREF_N	Universal	Primary reference clock. Accepts a differential or single-ended input. Input pins have AC-coupling capacitors and biasing internally. For LVCMOS input, the non-driven input pin must be pulled down to ground.
8	REFSEL	LVCMOS	Manual reference input selection for PLL (3-state). Weak pullup resistor.
9	HW_SW_CTRL	LVCMOS	Selection for Hard Pin Mode (ROM), Soft Pin Mode (EEPROM), or Register Default Mode. Weak pullup resistor.
10, 11	SECREF_P, SECREF_N	Universal	Secondary reference clock. Accepts a differential or single-ended input or crystal input. Input pins have AC-coupling capacitors and biasing internally. For LVCMOS input, external input termination is needed to attenuate the swing to less than 2.6 V, and the non-driven input pin must be pulled down to ground. For crystal input, AT-cut fundamental crystal must be used as per defined specification, and pullable crystal should be used for fine margining.
SYNTHESIZER BLOCK			
3	CAP_DIG	Analog	External bypass capacitor for digital blocks. Attach a 10 µF to GND.
28	CAP_LDO	Analog	External bypass capacitor for PLL LDO. Attach a 10 µF to GND.
34	LF	Analog	External loop filter for PLL.
35	CAP_PLL	Analog	External bypass capacitor for PLL. Attach a 10 µF to GND.
OUTPUT BLOCK			
14, 15	OUT0_P, OUT0_N	Universal	Differential/LVCMOS Output Pair 0. Programmable driver with differential or 2 × 1.8-V LVCMOS outputs.
17, 16	OUT1_P, OUT1_N	Universal	Differential/LVCMOS Output Pair 1. Programmable driver with differential or 2 × 1.8-V LVCMOS outputs.
20, 21	OUT2_P, OUT2_N	Universal	Differential/LVCMOS Output Pair 2. Programmable driver with differential or 2 × 1.8-V LVCMOS outputs.
23, 22	OUT3_P, OUT3_N	Universal	Differential/LVCMOS Output Pair 3. Programmable driver with differential or 2 × 1.8-V LVCMOS outputs.
39, 38	OUT4_P, OUT4_N	Universal	Differential/LVCMOS Output Pair 4. Programmable driver with differential or 2 × 1.8-V LVCMOS outputs.
42, 41	OUT5_P, OUT5_N	Universal	Differential/LVCMOS Output Pair 5. Programmable driver with differential or 2 × 1.8-V LVCMOS outputs.
45, 44	OUT6_P, OUT6_N	Universal	Differential/LVCMOS Output Pair 6. Programmable driver with differential or 2 × 1.8-V LVCMOS outputs.
48, 47	OUT7_P, OUT7_N	Universal	Differential/LVCMOS Output Pair 7. Programmable driver with differential or 2 × 1.8-V LVCMOS outputs.

Copyright © 2015–2016, Texas Instruments Incorporated

Pin Functions (continued)

NO.	NAME	TYPE	DESCRIPTION
DIGITAL CONTROL / INTERFACES (1)			
1	STATUS0	Universal	Status Output 0 (open drain, requires external pullup) or 3.3-V LVCMOS output from synth (push-pull). Status signal selection and output polarity are programmable.
2	STATUS1	Universal	Status Output 1 (open drain, requires external pullup) or 3.3-V LVCMOS output from synth (push-pull). Status signal selection and output polarity are programmable.
12	GPIO0	LVCMOS	Multifunction Inputs (2-state).
13	PDN	LVCMOS	Device Power-down (active low). Weak pullup resistor.
24	GPIO1	LVCMOS	Multifunction Input (3-state or 2-state).
25	SDA	LVCMOS	I^2C Serial Data (bi-directional, open drain). Requires an external pullup resistor to VDD_DIG. I^2C slave address is initialized from on-chip EEPROM.
26	SCL	LVCMOS	I^2C Serial Clock (bi-directional, open drain). Requires an external pull-up resistor to VDD_DIG.
29	NC	N/A	No Connect.
30	GPIO2	LVCMOS	Multifunction Input (3-state or 2-state).
31	GPIO3	LVCMOS	Multifunction Input (3-state or 2-state).
32	GPIO4	LVCMOS	Multifunction Input (2-state).
33	GPIO5	Universal	Multifunction Input (2-state) or Analog input for frequency margin.

(1) Refer to *Device Configuration Control* for details on the digital control/interfaces.

Copyright © 2015–2016, Texas Instruments Incorporated

8 Specifications

8.1 Absolute Maximum Ratings

over operating free-air temperature range (unless otherwise noted)[1]

	MIN	MAX	UNIT
Supply voltage for input, synthesizer, control, and output blocks, VDD_IN, VDD_PLL, VDD_LDO, VDD_DIG, VDDO_x	–0.3	3.6	V
Input voltage range, clock and logic inputs, V_{IN}	–0.3	V_{DD} +0.3	V
Output voltage range for clock and logic outputs, V_{OUT}	–0.3	V_{DD} + 0.3	V
Junction temperature, T_J		150	°C
Storage temperature, T_{stg}	–65	150	°C

(1) Stresses beyond those listed under *Absolute Maximum Ratings* may cause permanent damage to the device. These are stress ratings only, which do not imply functional operation of the device at these or any other conditions beyond those indicated under *Recommended Operating Conditions*. Exposure to absolute mAximum-rated conditions for extended periods may affect device reliability.

8.2 ESD Ratings

			VALUE	UNIT
$V_{(ESD)}$	Electrostatic discharge	Human-body model (HBM), per ANSI/ESDA/JEDEC JS-001[1]	±2000	V
		Charged-device model (CDM), per JEDEC specification JESD22-C101[2]	±500	

(1) JEDEC document JEP155 states that 500 V HBM allows safe manufacturing with a standard ESD control process.
(2) JEDEC document JEP157 states that 250 V CDM allows safe manufacturing with a standard ESD control process.

8.3 Recommended Operating Conditions

over operating free-air temperature range (unless otherwise noted)

	MIN	NOM	MAX	UNIT
Supply voltage for input, analog, control blocks, VDD_IN, VDD_PLL, VDD_LDO, VDD_DIG	3.135	3.3	3.465	V
Supply voltage for output drivers (Differential, LVCMOS), VDDO_x	1.7	1.8 2.5 3.3	3.465	V
Ambient temperature, T_A	-40	25	85	°C
Junction temperature, T_J			125	°C
Maximum VDD power-up ramp, dVDD/dt	0.1		100	ms
EEPROM number of writes, WR			100	

8.4 Thermal Information

THERMAL METRIC[1]		LMK03318 [2] [3] [4] RHA QFN-48			UNIT
		Airflow (LFM) 0	Airflow (LFM) 200	Airflow (LFM) 400	
$R_{\theta JA}$	Junction-to-ambient thermal resistance	26.47	16.4	14.62	°C/W
$R_{\theta JC(top)}$	Junction-to-case (top) thermal resistance	16.57	n/a	n/a	
$R_{\theta JB}$	Junction-to-board thermal resistance	6.84	n/a	n/a	
ψ_{JT}	Junction-to-top characterization parameter	0.23	0.31	0.47	
ψ_{JB}	Junction-to-board characterization parameter	4.02	3.86	3.84	
$R_{\theta JC(bot)}$	Junction-to-case (bottom) thermal resistance	1.06	n/a	n/a	

(1) For more information about traditional and new thermal metrics, see the *Semiconductor and IC Package Thermal Metrics* application report, SPRA953.
(2) The package thermal resistance is calculated on a 4 layer JEDEC board.
(3) Package DAP connected to PCB GND plane with 16 thermal vias (0.3 mm diameter).
(4) ψJB (junction to board) is used when the main heat flow is from the junction to the GND pad. Please refer to Thermal Considerations section for more information on ensuring good system reliability and quality.

Copyright © 2015–2016, Texas Instruments Incorporated

8.5 Thermal Information

THERMAL METRIC[1]		CONDITION	LMK03318 RHA QFN-48	UNIT
$R_{\theta JA}$	Junction-to-ambient thermal resistance	10-layer 200 mm x 250 mm board, 36 thermal vias, Airflow = 0 LFM	10	°C/W
ψ_{JB}	Junction-to-board characterization parameter	10-layer 200 mm x 250 mm board, 36 thermal vias, Airflow = 0 LFM	2.8	°C/W

(1) For more information about traditional and new thermal metrics, see the *Semiconductor and IC Package Thermal Metrics* application report, SPRA953.

8.6 Electrical Characteristics - Power Supply

VDD_IN, VDD_PLL, VDD_LDO, VDD_DIG = 3.3 V ± 5%, VDDO_x = 1.8 V ± 5%, 2.5 V ± 5%, 3.3 V ± 5%, T_A = –40°C to +85°C[1][2]

PARAMETER		TEST CONDITIONS	MIN	TYP	MAX	UNIT
IDD	Core current consumption, per block	Primary input (differential or single ended) - active		10		mA
		Secondary input (differential or single ended) - active		10		
		Secondary input (XO) - active		11		
		PLL doubler - active		4		
		PLL block – active		110		
		Control block		53		
IDDO	Output current consumption, per block	Output channel (MUX and Divider only) – active		46		mA
		AC-LVDS driver (one pair) AC-coupled to 100 Ω differential		10		
		AC-LVPECL driver (one pair), AC-coupled to 100 Ω differential		18		
		AC-CML driver (one pair), AC-coupled to 100 Ω differential		16		
		HCSL driver (one pair) 50 Ω to GND		25		
		1.8-V LVCMOS driver (two outputs), 100 MHz, 5 pF load[2]		10		
		3.3-V LVCMOS driver on STATUS0, STATUS1, 100 MHz, 5 pF load[2]		21		
IDD_IN	Current consumption, per supply pin	Inputs: - PRI input enabled, set to LVDS mode - SEC input enabled, set to crystal mode - Input MUX set to auto select - Reference clock is 25 MHz - R dividers set to 1 PLL: - M divider = 1 - Doubler enabled - I_{CP} = 6.4 mA - Loop bandwidth = 400 kHz - VCO Frequency = 5 GHz - Feedback divider = 100 - Post divider = 8 Outputs: - OUT[0-7] = 156.25 MHz LVPECL - STATUS1: Loss of lock PLL - STATUS0: Loss of secondary reference Power Supplies: - VDD_IN, VDD_PLL, VDD_LDO, VDD_DIG = 3.3 V - VDDO_xx = 3.3 V		48	65	mA
IDD_PLL				128	158	mA
IDD_LDO				15	30	mA
IDD_DIG				19	38	mA
IDDO_01				85	105	mA
IDDO_23				85	105	mA
IDDO_4				58	75	mA
IDDO_5				58	75	mA
IDDO_6				58	75	mA
IDDO_7				58	75	mA
IDD-PD	Total device, LMK03318	Power down (PDN = 0)		30	50	mA

(1) Refer to *Parameter Measurement Information* for relevant test conditions.
(2) $P_{TOTAL} = P_{DC} + P_{AC}$, where: P_{DC} = 3.4 mA typical. $P_{AC} = C \times V^2 \times f_{OUT}$.

Copyright © 2015–2016, Texas Instruments Incorporated

8.7 Pullable Crystal Characteristics (SECREF_P, SECREF_N)

VDD_IN, VDD_PLL, VDD_LDO, VDD_DIG = 3.3 V ± 5%, VDDO_x = 1.8 V ± 5%, 2.5 V ± 5%, 3.3 V ± 5%, T_A = –40°C to +85°C (1)(2)(3)(4)

PARAMETER		TEST CONDITIONS	MIN	TYP	MAX	UNIT
f_{XTAL}	Crystal frequency	Fundamental Mode	10		52	MHz
ESR	Equivalent series resistance	f_{XTAL} = 10 MHz to 16 MHz			60	Ω
		f_{XTAL} = 16 MHz to 30 MHz			50	
		f_{XTAL} = 30 MHz to 52 MHz			30	
C_L	Load capacitance	Recommended Crystal specifications		9		pF
C_0	Shunt capacitance			2.1		pF
C_0/C_1	Shunt capacitance to motional capacitance ratio			220	250	
P_{XTAL}	Crystal maximum drive level				300	µW
C_{XO}	On-Chip XO input capacitance at SECREF_P and SECREF_N	Single-ended, each pin referenced to GND	14		24	pF
Trim	Trim sensitivity	C_L = 9 pF, f_{XTAL} = 50 MHz		25		ppm/pF
		C_L = 9 pF, f_{XTAL} = 25 MHz		35		
$C_{on\text{-}chip\text{-}5p\text{-}load}$	On-chip tunable capacitor variation over VT across crystal load of 5 pF	Frequency accuracy of crystal over temperature, aging and initial accuracy < ±25 ppm.			450	fF
$C_{on\text{-}chip\text{-}12p\text{-}load}$	On-chip tunable capacitor variation over VT across crystal load of 12 pF	Frequency accuracy of crystal over temperature, aging and initial accuracy < ±25 ppm.			1.5	pF
f_{PR}	Pulling range	Crystal C_0/C_1 < 250		±50		ppm

(1) Parameter is specified by characterization and is not tested in production.
(2) The crystal pullability ratio is considered in the case where the XO frequency margining option is enabled. The actual pull range depends on the crystal pullability, as well as on-chip capacitance ($C_{on\text{-}chip}$), device crystal oscillator input capacitance (C_{XO}), PCB stray capacitance (C_{PCB}), and any installed on-board tuning capacitance (C_{TUNE}). Trim sensitivity or pullability (ppm/pF), TS = C1 × 1e6 / [2 × $(C_0 + C_L)^2$]. If the total external capacitance is less than the crystal C_L, the crystal oscillates at a higher frequency than the nominal crystal frequency. If the total external capacitance is higher than C_L, the crystal oscillates at a lower frequency than nominal.
(3) Using a crystal with higher ESR can degrade output phase noise and may impact crystal start-up.
(4) Verified with crystals specified for a load capacitance of C_L = 9 pF. PCB stray capacitance was measured to be 1 pF. Crystals tested: 19.2 MHz TXC (Part Number: 7M19272001), 19.44 MHz TXC (Part Number: 7M19472001), 25 MHz TXC (Part Number: 7M25072001), 38.88 MHz TXC (Part Number: 7M38872001), 49.152 MHz TXC (Part Number: 7M49172001), 50 MHz TXC (Part Number: 7M50072001).

8.8 Non-Pullable Crystal Characteristics (SECREF_P, SECREF_N)

VDD_IN, VDD_PLL, VDD_LDO, VDD_DIG = 3.3 V ± 5%, VDDO_x = 1.8 V ± 5%, 2.5 V ± 5%, 3.3 V ± 5%, T_A = –40°C to +85°C (1)(2)(3)

PARAMETER		TEST CONDITIONS	MIN	TYP	MAX	UNIT
f_{XTAL}	Crystal frequency	Fundamental mode	10		52	MHz
ESR	Equivalent series resistance	f_{XTAL} = 10 MHz to 16 MHz			60	Ω
		f_{XTAL} = 16 MHz to 30 MHz			50	
		f_{XTAL} = 30 MHz to 52 MHz			30	
P_{XTAL}	Crystal maximum drive level				300	µW
C_{XO}	On-Chip XO input capacitance at Xi and Xo	Single-ended, each pin referenced to GND	14		24	pF
$C_{on\text{-}chip\text{-}5p\text{-}load}$	On-chip tunable capacitor variation over VT across crystal load of 5 pF	Frequency accuracy of crystal over temperature, aging and initial accuracy < ± 25 ppm.			450	fF
$C_{on\text{-}chip\text{-}12p\text{-}load}$	On-chip tunable capacitor variation over VT across crystal load of 12 pF	Frequency accuracy of crystal over temperature, aging and initial accuracy < ± 25 ppm.			1.5	pF

(1) Parameter is specified by characterization and is not tested in production.
(2) Using a crystal with higher ESR can degrade XO phase noise and may impact crystal start-up.
(3) Verified with crystals specified for a load capacitance of C_L = 9 pF. PCB stray capacitance was measured to be 1 pF. Crystal tested: 25 MHz TXC (part number: 7M25072001).

8.9 Clock Input Characteristics (PRIREF_P/PRIREF_N, SECREF_P/SECREF_N)

VDD_IN, VDD_PLL, VDD_LDO, VDD_DIG = 3.3 V ± 5%, VDDO_x = 1.8 V ± 5%, 2.5 V ± 5%, 3.3 V ± 5%, T_A = –40°C to 85°C (1)

PARAMETER		TEST CONDITIONS	MIN	TYP	MAX	UNIT
f_{CLK}	Input frequency range		1		300	MHz
V_{IH} (2)	LVCMOS input high voltage	PRI_REF	1.4		VDD_IN	V
V_{IH} (2)	LVCMOS input high voltage	SEC_REF	1.4		2.6	V
V_{IL} (2)	LVCMOS input low voltage		0		0.5	V
$V_{ID,DIFF,PP}$	Input voltage swing, differential peak-peak	Differential input (where $V_{CLK} – V_{nCLK} = \|V_{ID}\| \times 2$)	0.2		2	V
V_{ICM}	Input common mode voltage	Differential input	0.1		2	V
dV/dt (3)	Input edge slew rate (20% to 80%)	Differential input, peak-peak	0.5			V/ns
		Single-ended input, non-driven input tied to GND	0.5			V/ns
IDC (3)	Input clock duty cycle		40%		60%	
I_{IN}	Input leakage current		–100		100	µA
C_{IN}	Input capacitance	Single-ended, each pin		2		pF

(1) Refer to *Parameter Measurement Information* for relevant test conditions.
(2) Slew-rate-detect circuitry must be used when V_{IH} < 1.7 V and V_{IL} > 0.2 V. V_{IH}/V_{IL} detect circuitry must be used when V_{IH} < 1.5 V and V_{IL} > 0.4 V. Refer to *REFDETCTL Register; R25* for relevant register information.
(3) Ensured by characterization.

8.10 VCO Characteristics

VDD_IN, VDD_PLL, VDD_LDO, VDD_DIG = 3.3 V ± 5%, VDDO_x = 1.8 V ± 5%, 2.5 V ± 5%, 3.3 V ± 5%, T_A = –40°C to +85°C

PARAMETER		TEST CONDITIONS	MIN	TYP	MAX	UNIT
f_{VCO}	Frequency range		4.8		5.4	GHz
K_{VCO}	VCO Gain			55		MHz/V

Copyright © 2015–2016, Texas Instruments Incorporated

8.11 PLL Characteristics

VDD_IN, VDD_PLL, VDD_LDO, VDD_DIG = 3.3 V ± 5%, VDDO_x = 1.8 V ± 5%, 2.5 V ± 5%, 3.3 V ± 5%, T_A = –40°C to +85°C

PARAMETER		TEST CONDITIONS	MIN	TYP	MAX	UNIT
f_{PD}	Phase detector frequency		1		150	MHz
PN1Hz	PLL figure of merit (1)			–231		dBc/Hz
PN10kHz	PLL 1/f noise at 10 kHz offset normalized to 1 GHz (2)	I_{CP} = 6.4 mA, 25 MHz phase detector		–136		dBc/Hz
I_{CP-HIZ}	Charge-pump leakage in Hi-Z Mode			55		nA

(1) PLL flat phase noise = PN1 Hz + 20 × log(N) + 10 × log(f_{PD}), with wide loop bandwidth and away from1/f noise region.
(2) Phase noise normalized to 1 GHz. PLL 1/f phase noise = PN10 kHz + 20 × log(f_{OUT}/1 GHz) – 10 × log(offset/10 kHz)

8.12 1.8-V LVCMOS Output Characteristics (OUT[7:0])

VDD_IN, VDD_PLL, VDD_LDO, VDD_DIG = 3.3 V ± 5%, VDDO_x = 1.8 V ± 5%, 2.5 V ± 5%, 3.3 V ± 5%, T_A = –40°C to +85°C, outputs loaded with 2 pF to GND (1)

PARAMETER		TEST CONDITIONS	MIN	TYP	MAX	UNIT
f_{OUT}	Output frequency		1		200	MHz
V_{OH} (2)	Output high voltage	I_{OH} = 1 mA	1.35			V
V_{OL}	Output low voltage	I_{OL} = 1 mA			0.35	V
I_{OH}	Output high current			21		mA
I_{OL}	Output low current			–21		mA
t_R/t_F	Output rise/fall time	20% to 80%		250		ps
t_{SKEW} (3)	Output-to-output skew	same divide value			100	ps
t_{SKEW} (3)	Output-to-output skew	LVCMOS-to-differential; same divide value			1.5	ns
$t_{PROP-CMOS}$	IN-to-OUT propagation delay	PLL Bypass		1		ns
PN-Floor	Output phase noise floor (f_{OFFSET} > 10 MHz)	66.66 MHz		–155		dBc/Hz
ODC (3)	Output Duty Cycle		45%		55%	
R_{OUT}	Output Impedance			50		Ω

(1) Refer to Parameter Measurement Information for relevant test conditions.
(2) V_{OH} level is NOT rail-to-rail for VDDO = 2.5 V or 3.3 V; 1.8-V LVCMOS output buffer supply is internally regulated down to 1.8 V.
(3) Ensured by characterization.

8.13 LVCMOS Output Characteristics (STATUS[1:0]

VDD_IN, VDD_PLL, VDD_LDO, VDD_DIG = 3.3 V ± 5%, VDD_O = 1.8 V ± 5%, 2.5 V ± 5%, 3.3 V ± 5%, T_A = –40°C to 85°C, outputs loaded with 2 pF to GND (1)

PARAMETER		TEST CONDITIONS	MIN	TYP	MAX	UNIT
f_{OUT}	Output frequency		3.75		200	MHz
V_{OH}	Output high voltage	I_{OH} = 1 mA	2.5			V
V_{OL}	Output low voltage	I_{OL} = 1 mA			0.6	V
I_{OH}	Output high current			33		mA
I_{OL}	Output low current			-33		mA
t_R/t_F (2)	Output rise/fall time	20% to 80%, R49[3-2], R49[1:0] = 10		2.1		ns
		20% to 80%, R49[3-2], R49[1-0] = 00		0.35		ns
PN-Floor	Output phase noise floor (f_{OFFSET} > 10 MHz)	66.66 MHz		-148		dBc/Hz
ODC (2)	Output duty cycle		45%		55%	
R_{OUT}	Output impedance			50		Ω

(1) Refer to *Parameter Measurement Information* for relevant test conditions.
(2) Ensured by characterization.

8.14 Open-Drain Output Characteristics (STATUS[1:0])

VDD_IN, VDD_PLL, VDD_LDO, VDD_DIG = 3.3 V ± 5%, VDDO_x = 1.8 V ± 5%, 2.5 V ± 5%, 3.3 V ± 5%, T_A = -40°C to 85°C

PARAMETER		TEST CONDITIONS	MIN	TYP	MAX	UNIT
V_{OL}	Output low voltage				0.6	V

8.15 AC-LVPECL Output Characteristics

VDD_IN, VDD_PLL, VDD_LDO, VDD_DIG = 3.3 V ± 5%, VDDO_x = 1.8 V ± 5%, 2.5 V ± 5%, 3.3 V ± 5%, T_A = -40°C to 85°C, output pair AC-coupled to 100 Ω differential load(1)

PARAMETER		TEST CONDITIONS	MIN	TYP	MAX	UNIT
f_{OUT}	Output frequency(2)		1		1000	MHz
V_{OD}	Output voltage swing		500	800	1000	mV
V_{OUT-PP}	Differential output peak-to-peak swing			2 × $\|V_{OD}\|$		V
V_{OS}	Output common mode		300		700	mV
t_{SKEW}(3)	Output-to-output skew	LVPECL-to-LVPECL; same divide value			60	ps
$t_{PROP-DIFF}$	IN-to-OUT propagation delay	PLL Bypass		400		ps
t_R/t_F(3)	Output rise or fall time	20% to 80%, < 300 MHz		175	300	ps
		±100 mV around center point, > 300 MHz			200	ps
PN-Floor	Output phase noise floor (f_{OFFSET} > 10 MHz)	156.25 MHz		–164		dBc/Hz
ODC(3)	Output duty cycle		45%		55%	

(1) Refer to *Parameter Measurement Information* for relevant test conditions.
(2) An output frequency over f_{OUT} maximum specification is possible, but output swing may be less than V_{OD} min spec.
(3) Ensured by characterization.

8.16 AC-LVDS Output Characteristics

VDD_IN, VDD_PLL, VDD_LDO, VDD_DIG = 3.3 V ± 5%, VDDO_x = 1.8 V ± 5%, 2.5 V ± 5%, 3.3 V ± 5%, T_A = -40°C to 85°C, output pair AC-coupled to 100 Ω differential load(1)

PARAMETER		TEST CONDITIONS	MIN	TYP	MAX	UNIT
f_{OUT}	Output frequency(2)		1		800	MHz
V_{OD}	Output voltage swing		250	400	450	mV
V_{OUT-PP}	Differential output peak-to-peak swing			2 x $\|V_{OD}\|$		V
V_{OS}	Output common mode		150		350	mV
t_{SKEW}(2)	Output-to-output skew	LVDS-to-LVDS; same divide value			60	ps
$t_{PROP-DIFF}$	IN-to-OUT propagation delay	PLL Bypass		400		ps
t_R/t_F(3)	Output rise/fall time	20% to 80%, < 300 MHz		200	300	ps
		±100 mV around center point, > 300 MHz			200	ps
PN-Floor	Output phase noise floor (f_{OFFSET} > 10 MHz)	156.25 MHz		–160		dBc/Hz
ODC(3)	Output duty cycle		45%		55%	

(1) Refer to *Parameter Measurement Information* for relevant test conditions.
(2) An output frequency over f_{OUT} maximum specification is possible, but output swing may be less than V_{OD} min spec.
(3) Ensured by characterization.

Copyright © 2015–2016, Texas Instruments Incorporated

8.17 AC-CML Output Characteristics

VDD_IN, VDD_PLL, VDD_LDO, VDD_DIG = 3.3 V ± 5%, VDDO_x = 1.8 V ± 5%, 2.5 V ± 5%, 3.3 V ± 5%, T_A = -40°C to +85°C, output pair AC-coupled to 100 Ω differential load(1)

PARAMETER		TEST CONDITIONS	MIN	TYP	MAX	UNIT
f_{OUT}	Output frequency(2)		1		1000	MHz
V_{OD}	Output voltage swing		400	600	800	mV
V_{SS}	Differential output peak-to-peak swing			2 × $\|V_{OD}\|$		V
V_{OS}	Output common mode		250		550	mV
t_{SKEW}(3)	Output-to-output skew	CML-to-CML; same divide value			60	ps
$t_{PROP-DIFF}$	IN-to-OUT propagation delay	PLL Bypass		400		ps
t_R/t_F(3)	Output rise/fall time	20% to 80%, < 300 MHz		190	300	ps
		±100 mV around center point, > 300 MHz			200	ps
PN-Floor	Output phase noise floor (f_{OFFSET} > 10 MHz)	156.25 MHz		–160		dBc/Hz
ODC(3)	Output duty cycle		45%		55%	

(1) Refer to *Parameter Measurement Information* for relevant test conditions.
(2) An output frequency over f_{OUT} maximum specification is possible, but output swing may be less than V_{OD} min spec.
(3) Ensured by characterization.

8.18 HCSL Output Characteristics

VDD_IN, VDD_PLL, VDD_LDO, VDD_DIG= 3.3 V ± 5%, VDDO_x = 1.8 V ± 5%, 2.5 V ± 5%, 3.3 V ± 5%, T_A = –40°C to +85°C, outputs with 50 Ω || 2 pF to GND(1)

PARAMETER		TEST CONDITIONS	MIN	TYP	MAX	UNIT
f_{OUT}	Output frequency		1		400	MHz
V_{OH}	Output high voltage(2)		660		850	mV
V_{OL}	Output low voltage(2)		–150		150	mV
V_{CROSS}	Absolute crossing voltage(3)		250		550	mV
$V_{CROSS-DELTA}$	Variation of V_{CROSS}(3)		0		140	mV
t_{SKEW}(4)	Output-to-output skew	same divide value			100	ps
$t_{PROP-DIFF}$	IN-to-OUT propagation delay	PLL Bypass		400		ps
dV/dt(4)	Slew rate(2)		2.25		5	V/ns
PN-Floor	Output phase noise floor (f_{OFFSET} > 10 MHz)	100 MHz		–158		dBc/Hz
ODC(4)	Output duty cycle		45%		55%	

(1) Refer to *Parameter Measurement Information* for relevant test conditions.
(2) Measured from -150 mV to +150 mV on the differential waveform (OUT minus nOUT) with the 300 mVpp measurement window centered on the differential zero crossing.
(3) Ensured by design.
(4) Ensured by characterization.

8.19 Power-On/Reset Characteristics

VDD_IN, VDD_PLL, VDD_LDO, VDD_DIG = 3.3 V ± 5%, VDDO_x = 1.8 V ± 5%, 2.5 V ± 5%, 3.3 V ± 5%, T_A = –40°C to +85°C

PARAMETER		TEST CONDITIONS	MIN	TYP	MAX	UNIT
V_{THRESH}	Threshold voltage		2.72		2.95	V
V_{DROOP}	Allowable voltage droop				0.1	V
t_{S-XTAL}	Start-up time with 25 MHz XTAL	Measured from time of supply reaching 3.135 V to time of output toggling			10	ms
t_{S-CLK}	Start-up time with 25 MHz clock input	Measured from time of supply reaching 3.135 V to time of output toggling			10	ms

Copyright © 2015–2016, Texas Instruments Incorporated

8.20 2-Level Logic Input Characteristics (HW_SW_CTRL, PDN, GPIO[5:0])

VDD_IN, VDD_PLL, VDD_LDO, VDD_DIG = 3.3 V ± 5%, VDDO_x = 1.8 V ± 5%, 2.5 V ± 5%, 3.3 V ± 5%, T_A = –40°C to +85°C

PARAMETER		TEST CONDITIONS	MIN	TYP	MAX	UNIT
V_{IH}	Input high voltage		1.2			V
V_{IL}	Input low voltage				0.6	V
I_{IH}	Input high current	V_{IH} = VDD_DIG	–40		40	µA
I_{IL}	Input low current	V_{IL} = GND	–40		40	µA
C_{IN}	Input capacitance			2		pF

8.21 3-Level Logic Input Characteristics (REFSEL, GPIO[3:1])

VDD_IN, VDD_PLL, VDD_LDO, VDD_DIG = 3.3 V ± 5%, VDDO_x = 1.8 V ± 5%, 2.5 V ± 5%, 3.3 V ± 5%, T_A = –40°C to +85°C

PARAMETER		TEST CONDITIONS	MIN	TYP	MAX	UNIT
V_{IH}	Input high voltage		1.4			V
V_{IM}	Input mid voltage			0.9		V
V_{IL}	Input low voltage				0.4	V
I_{IH}	Input high current	V_{IH} = VDD_DIG	–40		40	µA
I_{IL}	Input low current	V_{IL} = GND	–40		40	µA
C_{IN}	Input capacitance			2		pF

8.22 Analog Input Characteristics (GPIO[5])

VDD_IN, VDD_PLL, VDD_LDO, VDD_DIG = 3.3 V ± 5%, VDDO_x = 1.8 V ± 5%, 2.5 V ± 5%, 3.3 V ± 5%, T_A = –40°C to +85°C, pulldown resistor on GPIO[5] to GND as specified below, HW_SW_CTRL = 0

PARAMETER		TEST CONDITIONS	MIN	TYP	MAX	UNIT
V_{CTRL}	Control voltage range		0		VDD_DIG	V
V_{STEP}	Input voltage for XO frequency offset step selection on GPIO[5]	50 Ω to GND: Selects on-chip capacitive load set by R88 and R89		50		mV
		2.32 kΩ to GND: Selects on-chip capacitive load set by R90 and R91		200		mV
		5.62 kΩ to GND: Selects on-chip capacitive load set by R92 and R93		400		mV
		10.5 kΩ to GND: Selects on-chip capacitive load set by R94 and R95		600		mV
		18.7 kΩ to GND: Selects on-chip capacitive load set by R96 and R97		800		mV
		34.8 kΩ to GND: Selects on-chip capacitive load set by R98 and R99		1000		mV
		84.5 kΩ to GND: Selects on-chip capacitive load set by R100 and R101		1200		mV
		Left floating: Selects on-chip capacitive load set by R102 and R103		1400		mV
t_{DELAY}	Delay between voltage changes on GPIO[5] pin			100		ms

Copyright © 2015–2016, Texas Instruments Incorporated

8.23 I²C-Compatible Interface Characteristics (SDA, SCL)

VDD_IN, VDD_PLL, VDD_LDO, VDD_DIG = 3.3 V ± 5%, VDDO_x = 1.8 V ± 5%, 2.5 V ± 5%, 3.3 V ± 5%, T_A = –40°C to +85°C(1)(2)

PARAMETER		TEST CONDITIONS	MIN	TYP	MAX	UNIT
V_{IH}	Input High Voltage		1.2			V
V_{IL}	Input Low Voltage				0.6	V
I_{IH}	Input Leakage		-40		40	µA
C_{IN}	Input Capacitance			2		pF
C_{OUT}	Input Capacitance				400	pF
V_{OL}	Output Low Voltage	I_{OL} = 3 mA			0.6	V
f_{SCL}	I²C Clock Rate		100		400	kHz
t_{SU_STA}	START Condition Setup Time	SCL high before SDA low	0.6			µs
t_{H_STA}	START Condition Hold Time	SCL low after SDA low	0.6			µs
t_{PH_STA}	SCL Pulse Width High		0.6			µs
t_{PL_STA}	SCL Pulse Width Low		1.3			µs
t_{H_SDA}	SDA Hold Time	SDA valid after SCL low	0		0.9	µs
t_{SU_SDA}	SDA Setup Time		115			ns
t_{R_IN} / t_{F_IN}	SCL/SDA Input Rise and Fall Time				300	ns
t_{F_OUT}	SDA Output Fall Time	C_{BUS} = 10 pF to 400 pF			250	ns
t_{SU_STOP}	STOP Condition Setup Time		0.6			µs
t_{BUS}	Bus Free Time between STOP and START		1.3			µs

(1) Total capacitive load for each bus line ≤ 400 pF.
(2) Ensured by design.

8.24 Typical 156.25 MHz Closed-Loop Output Phase Noise Characteristics

VDD_IN, VDD_PLL, VDD_LDO, VDD_DIG = 3.3 V, VDDO_x = 1.8 V, 2.5 V, 3.3 V, T_A = 25°C, Reference Input = 50 MHz, PFD = 100 MHz, Integer-N PLL bandwidth = 400 kHz, VCO frequency = 5 GHz, post divider = 8, output divider = 4, Output Type = AC-LVPECL/AC-LVDS/AC-CML/HCSL/LVCMOS(1)(2)

PARAMETER		OUTPUT TYPE					UNIT
		AC-LVPECL	AC-LVDS	AC-CML	HCSL	LVCMOS	
phn_{10k}	Phase noise at 10 kHz offset	–143	–142	–142	–141	–139	dBc/Hz
phn_{50k}	Phase noise at 50 kHz offset	–143.5	–143	–143	–142	–141	dBc/Hz
phn_{100k}	Phase noise at 100 kHz offset	–144	–144	–144	–144	–143	dBc/Hz
phn_{500k}	Phase noise at 500 kHz offset	–146	–146	–146	–146	–145	dBc/Hz
phn_{1M}	Phase noise at 1 MHz offset	–149.5	–149	–149	–149	–149	dBc/Hz
phn_{5M}	Phase noise at 5 MHz offset	–160.5	–160	–160	–159	–158	dBc/Hz
phn_{20M}	Phase noise at 20 MHz offset	–164.5	–164	–164	–161	–159	dBc/Hz
RJ	Random jitter integrated from 10 kHz to 20 MHz offsets	96	99	99	107	119	fs, RMS

(1) Refer to *Parameter Measurement Information* for relevant test conditions.
(2) Jitter specifications apply for differential output formats with low-jitter differential input clock or crystal input. Phase jitter measured with Agilent E5052 signal source analyzer using a differential-to-single ended converter (balun or buffer).

Copyright © 2015–2016, Texas Instruments Incorporated

8.25 Typical 161.1328125 MHz Closed-Loop Output Phase Noise Characteristics (1) (2)

VDD_IN, VDD_PLL, VDD_LDO, VDD_DIG = 3.3 V, VDDO_x = 1.8 V, 2.5 V, 3.3 V, T_A = 25°C, Reference Input = 50 MHz, PFD = 100 MHz, Fractional-N PLL bandwidth = 400 kHz, VCO Frequency = 5.15625 GHz, Post Divider = 8, Output Divider = 4, Output Type = AC-LVPECL/AC-LVDS/AC-CML/HCSL/LVCMOS

PARAMETER		OUTPUT TYPE					UNIT
		AC-LVPECL	AC-LVDS	AC-CML	HCSL	LVCMOS	
phn_{10k}	Phase noise at 10 kHz offset	–136	–136	–136	-135	-135	dBc/Hz
phn_{50k}	Phase noise at 50 kHz offset	–139	–139	–139	-139	-139	dBc/Hz
phn_{100k}	Phase noise at 100 kHz offset	–140	–140	–140	-140	-140	dBc/Hz
phn_{500k}	Phase noise at 500 kHz offset	–142	–142	–142	–142	-142	dBc/Hz
phn_{1M}	Phase noise at 1 MHz offset	–150	–150	–150	–149	-149	dBc/Hz
phn_{5M}	Phase noise at 5 MHz offset	–160.5	–160	–160	–159	-158	dBc/Hz
phn_{20M}	Phase noise at 20 MHz offset	–164.5	–164	–164	–161	-159	dBc/Hz
RJ	Random jitter integrated from 10 kHz to 20 MHz offsets	120	122	122	130	136	fs, RMS

(1) Refer to *Parameter Measurement Information* for relevant test conditions.
(2) Jitter specifications apply for differential output formats with low-jitter differential input clock or crystal input. Phase jitter measured with Agilent E5052 signal source analyzer using a differential-to-single ended converter (balun or buffer).

8.26 Closed-Loop Output Jitter Characteristics (1) (2) (3) (4)

VDD_IN, VDD_PLL, VDD_LDO, VDD_DIG = 3.3 V ± 5%, VDDO_x = 1.8 V ± 5%, 2.5 V ± 5%, 3.3 V ± 5%, TA = -40°C to 85°C, Integer-N PLL with 4.8 GHz, 4.9152 GHz, 4.97664 GHz, 5 GHz or 5.1 GHz VCO, 400 kHz PLL bandwidth and doubler enabled or disabled, fractional-N PLL with 4.8 GHz, 4.9152 GHz, 4.944 GHz, 4.97664 GHz, 5 GHz, 5.15 GHz or 5.15625 GHz VCO, 400 kHz bandwidth and doubler enabled or disabled, 1.8-V or 3.3-V LVCMOS output load of 2 pF to GND, AC-LVPECL/AC-LVDS/CML output pair AC-coupled to 100 Ω differential load, HCSL outputs with 50 Ω || 2 pF to GND.

PARAMETER		TEST CONDITIONS	MIN	TYP	MAX	UNIT
RJ	RMS Phase Jitter (12 kHz – 20 MHz) (1 kHz – 5 MHz)	19.2 MHz, 19.44 MHz, 25 MHz, 27 MHz, 38.88 MHz crystal, integer-N PLL, f_{OUT} ≥ 100 MHz, all differential output types		120	200	fs RMS
RJ	RMS Phase Jitter (12 kHz – 20 MHz) (1 kHz – 5 MHz)	19.2 MHz, 19.44 MHz, 25 MHz, 27 MHz, 38.8 MHz crystal, fractional-N PLL, f_{OUT} ≥ 100 MHz, all differential output types		200	350	fs RMS
RJ	RMS Phase Jitter (12 kHz – 20 MHz) (1 kHz – 5 MHz)	50 MHz crystal, Integer-N PLL, f_{OUT} = 156.25 MHz, all differential output types		100	150	fs RMS
RJ	RMS Phase Jitter (12 kHz – 20 MHz) (1 kHz – 5 MHz)	50 MHz crystal, Fractional-N PLL, f_{OUT} = 155.52 MHz, all differential output types		140	210	fs RMS
RJ	RMS Phase Jitter (12 kHz – 20 MHz) or (12 kHz – 5 MHz)	f_{OUT} ≥ 10 MHz, 1.8-V or 3.3-V LVCMOS output, integer-N or fractional-N PLL			800	fs RMS

(1) Phase jitter measured with Agilent E5052 source signal analyzer using a differential-to-single-ended converter (balun or buffer) for differential outputs.
(2) Verified with crystals specified for a load capacitance of CL = 9 pF. PCB stray capacitance was measured to be 1 pF. Crystals tested: 19.2 MHz TXC (Part Number: 7M19272001), 19.44 MHz TXC (Part Number: 7M19472001), 25 MHz TXC (Part Number: 7M25072001), 27 MHz TXC (Part Number: 7M27072001), 38.88 MHz TXC (Part Number: 7M38872001), 50 MHz TXC (Part Number: 7M50072001).
(3) Refer to *Parameter Measurement Information* for relevant test conditions.
(4) For output frequency < 40 MHz, integration band for RMS phase jitter is 12 kHz – 5 MHz.

Copyright © 2015–2016, Texas Instruments Incorporated

8.27 Typical Power Supply Noise Rejection Characteristics(1)

VDD_IN, VDD_PLL, VDD_LDO, VDD_DIG = 3.3 V, VDDO_x = 3.3 V, T_A = 25°C, Reference Input = 50 MHz, PFD = 100 MHz, PLL bandwidth = 400 kHz, VCO Ffrequency = 5 GHz, post divider = 8, output divider = 4, AC-LVPECL/AC-LVDS/CML output pair AC-coupled to 100 Ω differential load, HCSL outputs with 50 Ω || 2 pF to GND, sinusoidal noise injected in either of the following supply nodes: VDD_IN, VDD_PLL, VDD_DIG or VDDO_x.

PARAMETER		50 mV RIPPLE ON SUPPLY TYPE					UNIT
		VDD_IN	VDD_PLL	VDD_LDO	VDD_DIG	VDDO_x	
$PSNR_{50k}$	50 kHz spur on 156.25 MHz output	-86	-87	-87	-110	-103	dBc
$PSNR_{100k}$	100 kHz spur on 156.25 MHz output	-85	-86	-86	-110	-98	dBc
$PSNR_{500k}$	500 kHz spur on 156.25 MHz output	-87	-89	-89	-110	-97	dBc
$PSNR_{1M}$	1 MHz spur on 156.25 MHz output	-91	-92	-92	-110	-94	dBc

(1) Refer to *Parameter Measurement Information* for relevant test conditions.

8.28 Typical Power-Supply Noise Rejection Characteristics(1)

VDD_IN, VDD_PLL, VDD_LDO, VDD_DIG= 3.3 V, VDDO_x = 1.8 V, T_A = 25°C, Reference Input = 50 MHz, PFD = 100 MHz, PLL bandwidth = 400 kHz, VCO frequency = 5 GHz, post divider = 8, output divider = 4, AC-LVPECL/AC-LVDS/CML output pair AC-coupled to 100 Ω differential load, HCSL outputs with 50 Ω || 2 pF to GND, sinusoidal noise injected in VDDO_x.

PARAMETER		50 mV RIPPLE ON SUPPLY TYPE					UNIT
		VDD_IN	VDD_PLL	VDD_LDO	VDD_DIG	VDDO_x	
$PSNR_{50k}$	50 kHz spur on 156.25 MHz output	n/a	n/a	n/a	n/a	-93	dBc
$PSNR_{100k}$	100 kHz spur on 156.25 MHz output	n/a	n/a	n/a	n/a	-88	dBc
$PSNR_{500k}$	500 kHz spur on 156.25 MHz output	n/a	n/a	n/a	n/a	-78	dBc
$PSNR_{1M}$	1 MHz spur on 156.25 MHz output	n/a	n/a	n/a	n/a	-74	dBc

(1) Refer to *Parameter Measurement Information* for relevant test conditions.

8.29 Typical Closed-Loop Output Spur Characteristics(1)

VDD_IN, VDD_PLL, VDD_LDO, VDD_DIG = 3.3V, VDDO_x = 1.8 V, 2.5 V, 3.3 V, T_A = –40°C to +85°C, 50 MHz reference input, 156.25 MHz or 125 MHz output with VCO frequency = 5 GHz, integer-N PLL, PLL bandwidth = 400 kHz, post divider = 8, output divider = 4 or 5, 161.1328125 MHz output with VCO frequency = 5.15625 GHz, fractional-N PLL, PLL bandwidth = 400 kHz, post divider = 8, output divider = 4, LVCMOS output load of 2 pF to GND, AC-LVPECL/AC-LVDS/AC-CML output pair AC-coupled to 100 Ω differential load, HCSL outputs with 50 Ω || 2 pF to GND

PARAMETER		CONDITION	OUTPUT TYPE					UNIT
			AC-LVPECL	AC-LVDS	AC-CML	HCSL	LVCMOS	
$P_{SPUR-PFD}$	PFD/reference clock spurs	156.25 ± 78.125 MHz	–77	–74	–76	–73	–75	dBc
$P_{SPUR-PFD}$	PFD/reference clock spurs	161.1328125 ± 80.56640625 MHz	–80	–77	–79	–77	–82	dBc
$P_{SPUR-FRAC}$	Largest fractional PLL spurs	161.1328125 ± 80.56640625 MHz	–74	–73	–76	–73	–74	dBc
$P_{SPUR-OUT}$	Output channel-to-channel isolation	f_{VICTIM} = 156.25 MHz OUT4, f_{AGGR} = 125 MHz OUT5, AC-LVPECL aggressor	–73	–70	–70	–67	–74	dBc
$P_{SPUR-OUT}$	Output channel-to-channel isolation	f_{VICTIM} = 156.25 MHz OUT4, f_{AGGR} = 125 MHz OUT5, AC-LVDS aggressor	–76	–74	–75	–71	–79	dBc
$P_{SPUR-OUT}$	Output channel-to-channel isolation	f_{VICTIM} = 156.25 MHz OUT4, f_{AGGR} = 125 MHz OUT5, HCSL aggressor	–78	–74	–75	–72	–77	dBc
$P_{SPUR–OUT}$	Output channel-to-channel isolation	f_{VICTIM} = 156.25 MHz OUT4, f_{AGGR} = 125 MHz OUT5, LVCMOS aggressor	–72	–70	–71	–66	–73	dBc

(1) Refer to *Parameter Measurement Information* for relevant test conditions.

Copyright © 2015–2016, Texas Instruments Incorporated

8.30 Typical Characteristics

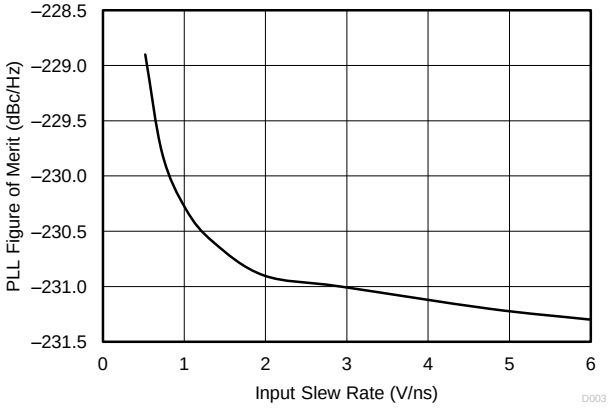

Figure 1. PLL Figure of Merit (FOM) vs Slew Rate

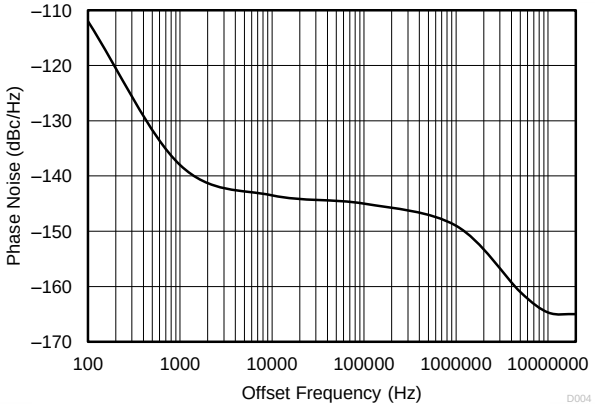

Figure 2. Closed Loop Phase Noise of AC-LVPECL Outputs at 156.25 MHz with PLL Bandwidth at 1 MHz, Integer N PLL, 50 MHz Crystal Input, 5 GHz VCO Frequency, Post Divider = 8, Output Divider = 4

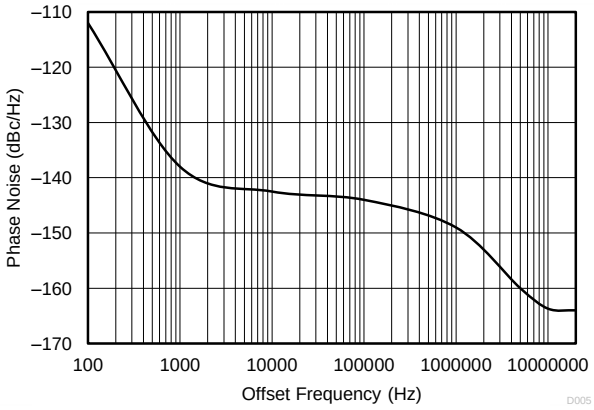

Figure 3. Closed Loop Phase Noise of AC-LVDS Outputs at 156.25 MHz with PLL Bandwidth at 1 MHz, Integer N PLL, 50 MHz Crystal Input, 5 GHz VCO Frequency, Post Divider = 8, Output Divider = 4

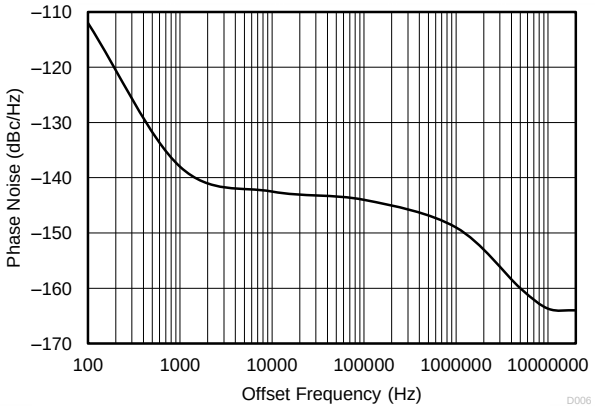

Figure 4. Closed Loop Phase Noise of AC-CML Outputs at 156.25 MHz with PLL Bandwidth at 1 MHz, Integer N PLL, 50 MHz Crystal Input, 5 GHz VCO Frequency, Post Divider = 8, Output Divider = 4

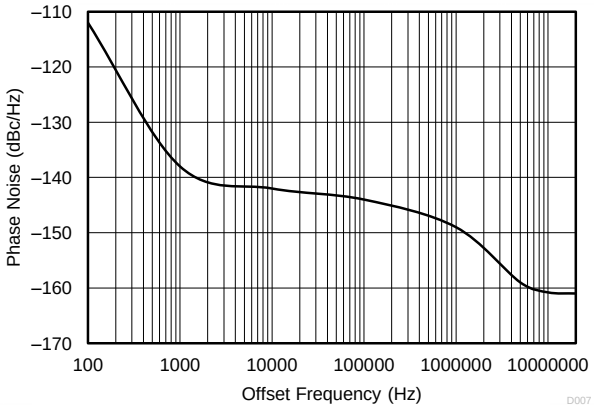

Figure 5. Closed Loop Phase Noise of HCSL Outputs at 156.25 MHz with PLL Bandwidth at 1 MHz, Integer N PLL, 50 MHz Crystal Input, 5 GHz VCO Frequency, Post Divider = 8, Output Divider = 4

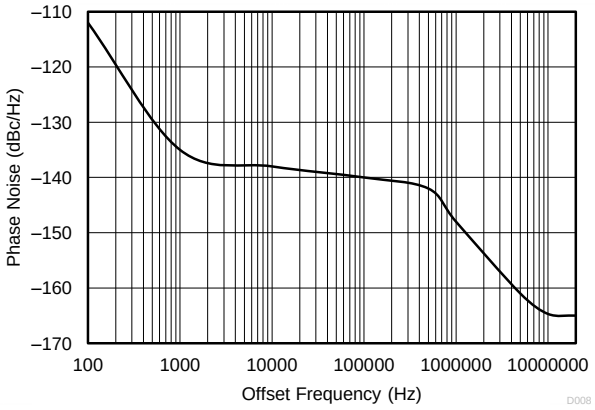

Figure 6. Closed Loop Phase Noise of AC-LVPECL Outputs at 161.1328125 MHz with PLL Bandwidth at 400 kHz, Fractional N PLL, 50 MHz Crystal Input, 5.15625 GHz VCO Frequency, Post Divider = 8, Output Divider = 4

Copyright © 2015–2016, Texas Instruments Incorporated

Typical Characteristics (continued)

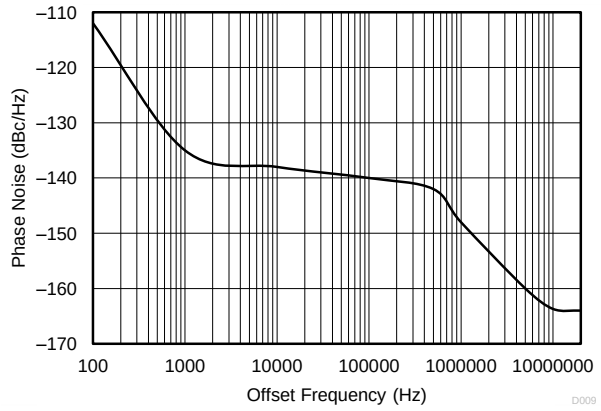

Figure 7. Closed Loop Phase Noise of AC-LVDS Outputs at 161.1328125 MHz with PLL Bandwidth at 400 kHz, Fractional N PLL, 50 MHz Crystal Input, 5 GHz VCO Frequency, Post Divider = 8, Output Divider = 4

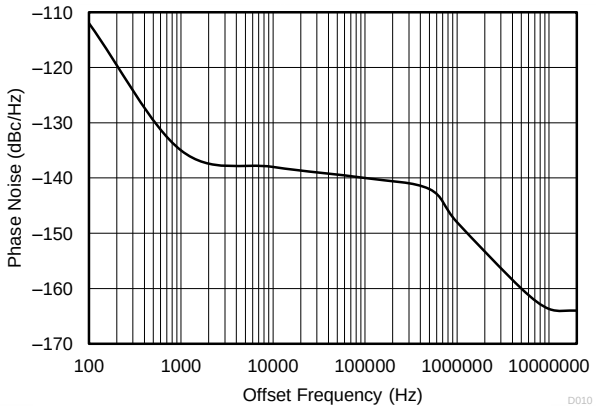

Figure 8. Closed Loop Phase Noise of AC-CML Outputs at 161.1328125 MHz with PLL Bandwidth at 400 kHz, Fractional N PLL, 50 MHz Crystal Input, 5 GHz VCO Frequency, Post Divider = 8, Output Divider = 4

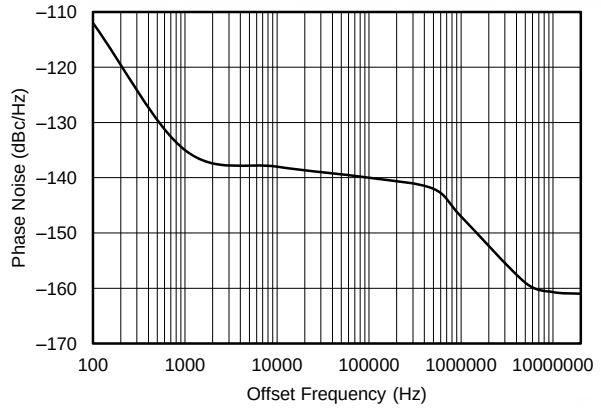

Figure 9. Closed Loop Phase Noise of HCSL Outputs at 161.1328125 MHz with PLL Bandwidth at 400 kHz, Fractional N PLL, 50 MHz Crystal Input, 5 GHz VCO Frequency, Post Divider = 8, Output Divider = 4

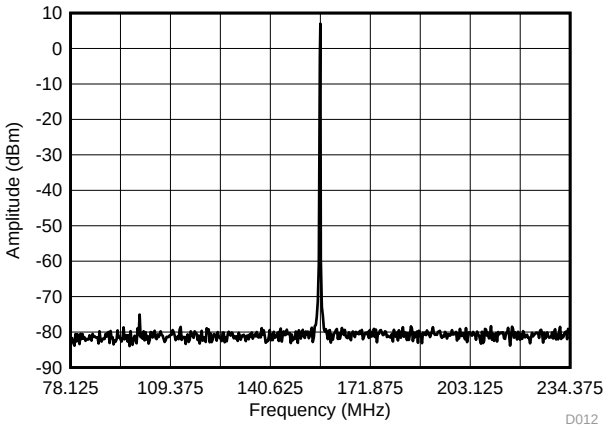

Figure 10. 156.25 ± 78.125 MHz AC-LVPECL Output Spectrum with PLL Bandwidth at 1 MHz, Integer N PLL, 50 MHz Crystal Input, 5 GHz VCO Frequency, Post Divider = 8, Output Divider = 4

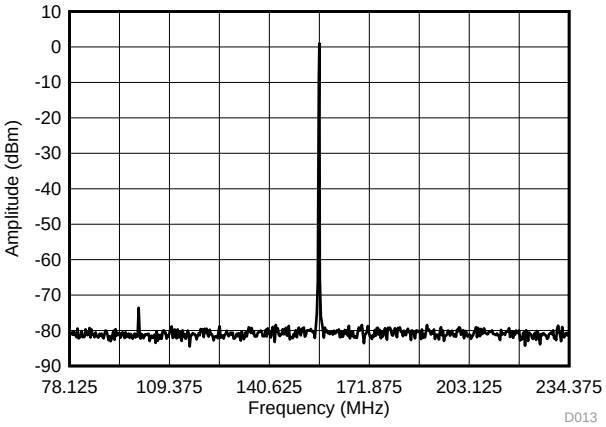

Figure 11. 156.25 ± 78.125 MHz AC-LVDS Output Spectrum with PLL Bandwidth at 1 MHz, Integer N PLL, 50 MHz Crystal Input, 5 GHz VCO Frequency, Post Divider = 8, Output Divider = 4

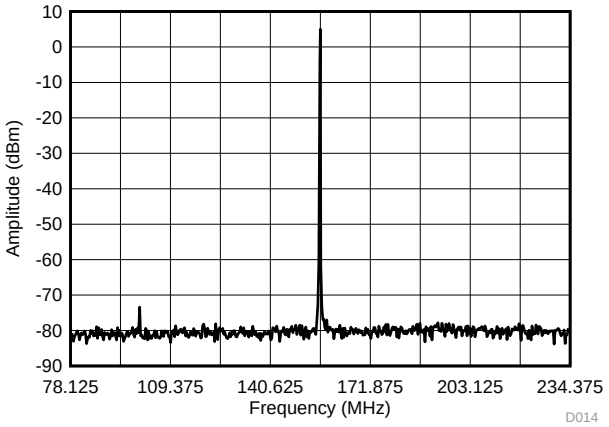

Figure 12. \156.25 ± 78.125 MHz AC-CML Output Spectrum with PLL Bandwidth at 1 MHz, Integer N PLL, 50 MHz Crystal Input, 5 GHz VCO Frequency, Post Divider = 8, Output Divider = 4

Typical Characteristics (continued)

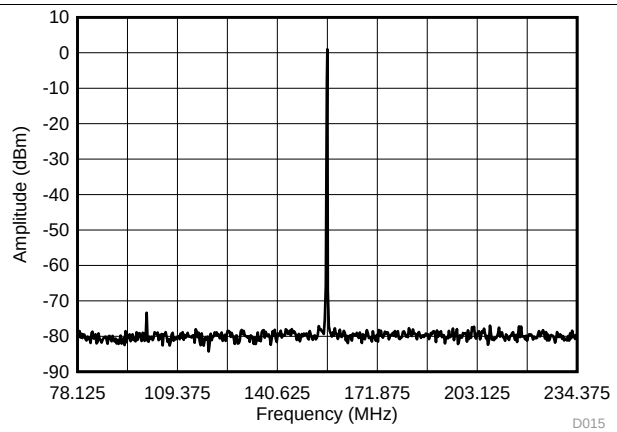

Figure 13. 156.25 ± 78.125 MHz HCSL Output Spectrum with PLL Bandwidth at 1 MHz, Integer N PLL, 50 MHz Crystal Input, 5 GHz VCO Frequency, Post Divider = 8, Output Divider = 4

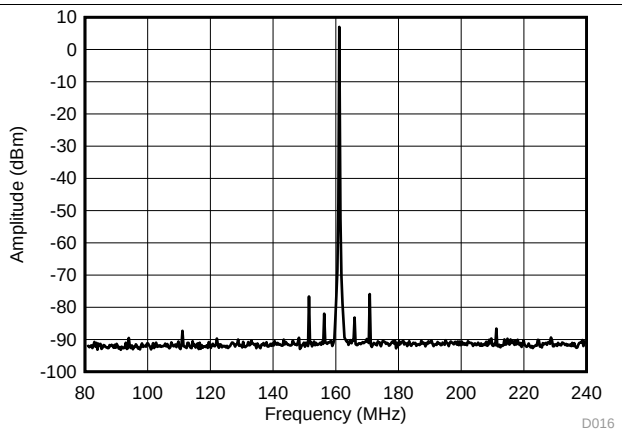

Figure 14. 161.1328125 ± 80.56640625 MHz AC-LVPECL Output Spectrum with PLL Bandwidth at 400 kHz, Fractional N PLL, 50 MHz Crystal Input, 5.15625 GHz VCO Frequency, Post Divider = 8, Output Divider = 4

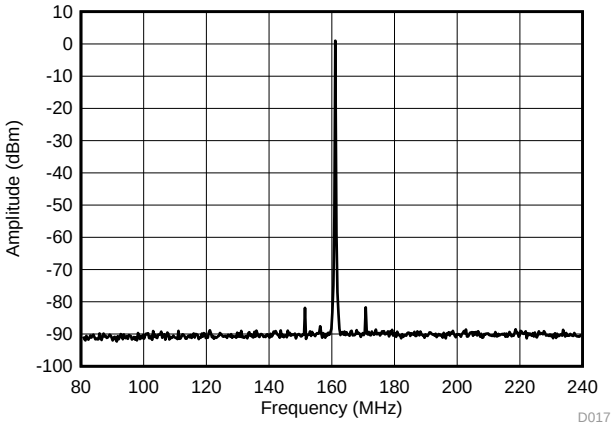

Figure 15. 161.1328125 ± 80.56640625 MHz AC-LVDS Output Spectrum with PLL Bandwidth at 400 kHz, Fractional N PLL, 50 MHz Crystal Input, 5.15625 GHz VCO Frequency, Post Divider = 8, Output Divider = 4

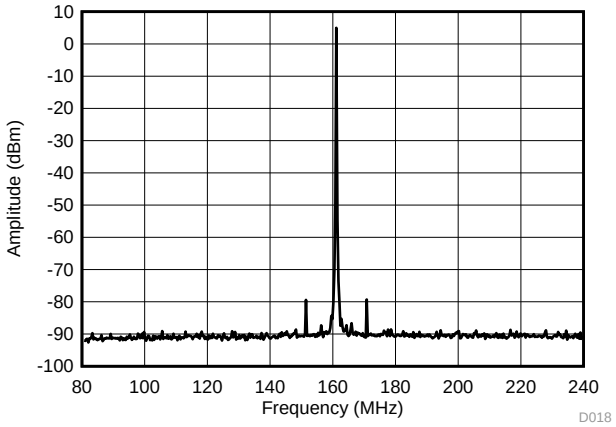

Figure 16. 161.1328125 ± 80.56640625 MHz AC-CML Output Spectrum with PLL Bandwidth at 400 kHz, Fractional N PLL, 50 MHz Crystal Input, 5.15625 GHz VCO Frequency, Post Divider = 8, Output Divider = 4

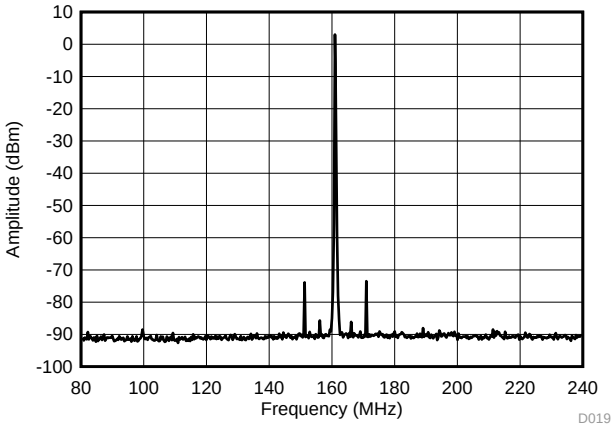

Figure 17. 161.1328125 ± 80.56640625 MHz HCSL Output Spectrum with PLL Bandwidth at 400 kHz, Fractional N PLL, 50 MHz Crystal Input, 5.15625 GHz VCO Frequency, Post Divider = 8, Output Divider = 4

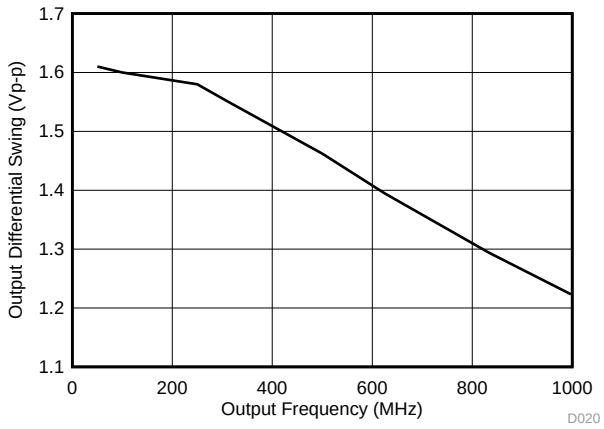

Figure 18. AC-LVPECL Differential Output Swing vs Frequency

Copyright © 2015–2016, Texas Instruments Incorporated

Typical Characteristics (continued)

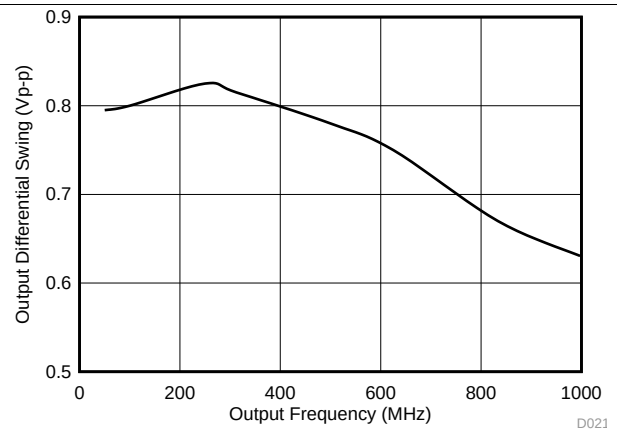

Figure 19. AC-LVDS Differential Output Swing vs Frequency

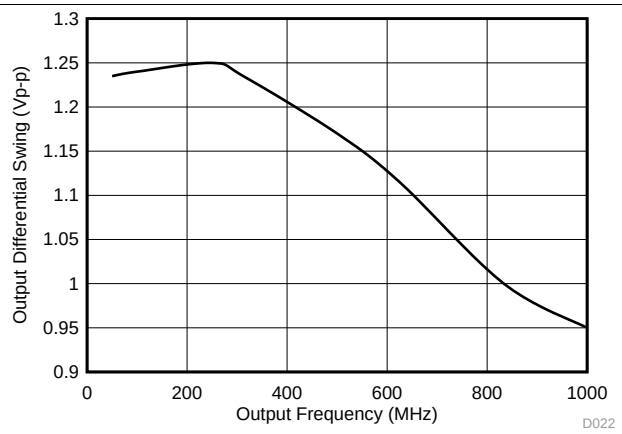

Figure 20. AC-CML Differential Output Swing vs Frequency

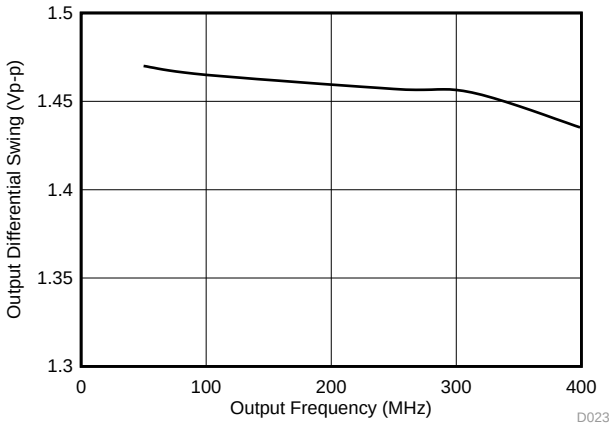

Figure 21. HCSL Differential Output Swing vs Frequency

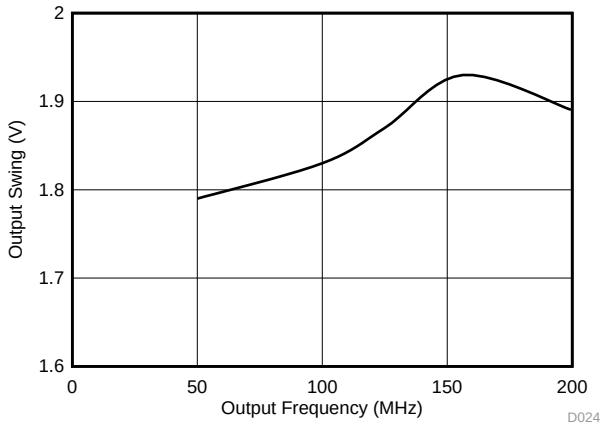

Figure 22. 1.8-V LVCMOS (on OUT[7:0]) Output Swing vs Frequency

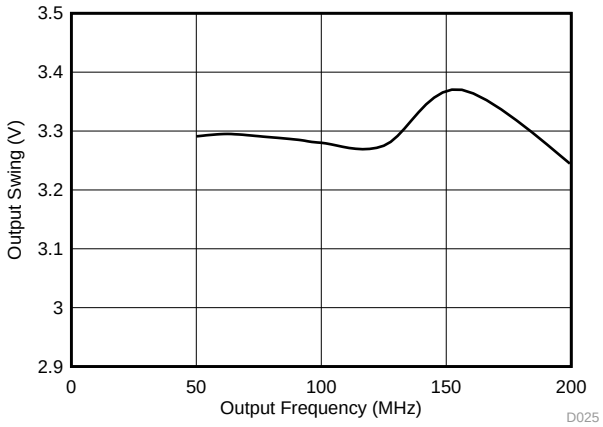

Figure 23. 3.3-V LVCMOS (on STATUS[1:0]) Output Swing vs Frequency

9 Parameter Measurement Information

9.1 Test Configurations

This section describes the characterization test setup of each block in the LMK03318.

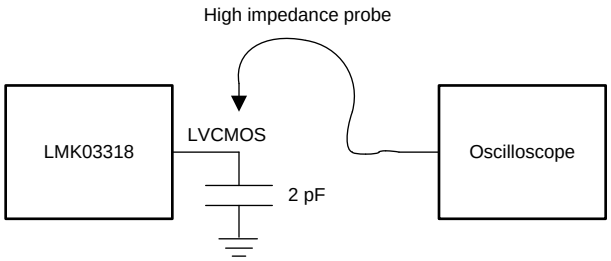

Figure 24. LVCMOS Output DC Configuration During Device Test

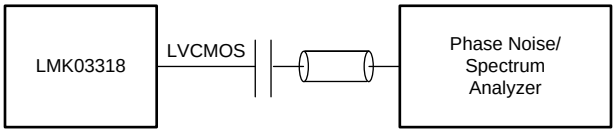

Figure 25. LVCMOS Output AC Configuration During Device Test

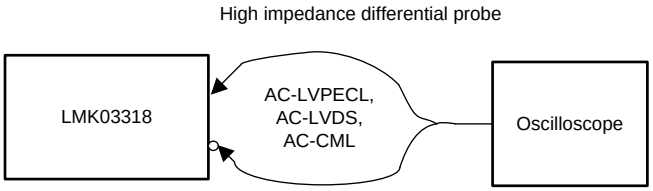

Figure 26. AC-LVPECL, AC-LVDS, AC-CML Output DC Configuration During Device Test

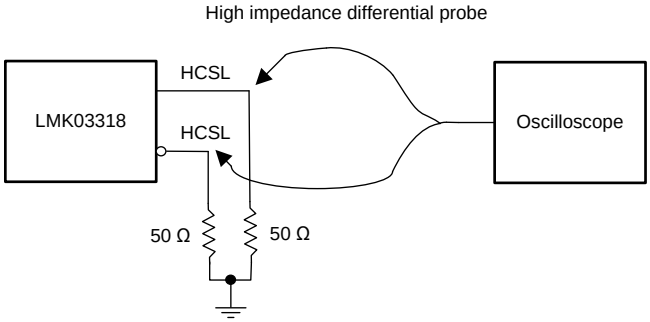

Figure 27. HCSL Output DC Configuration During Device Test

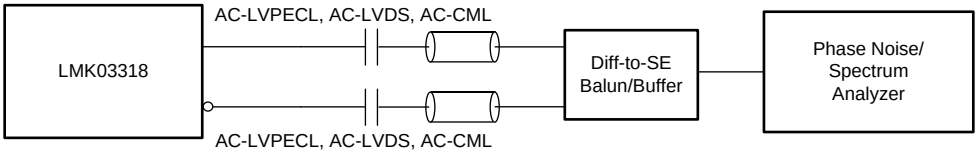

Figure 28. AC-LVPECL, AC-LVDS, AC-CML Output AC Configuration During Device Test

Copyright © 2015–2016, Texas Instruments Incorporated

Test Configurations (continued)

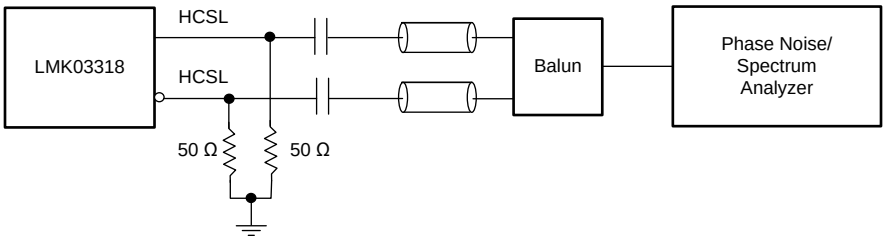

Figure 29. HCSL Output AC Configuration During Device Test

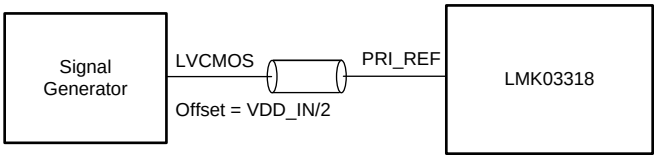

Figure 30. LVCMOS Primary Input DC Configuration During Device Test

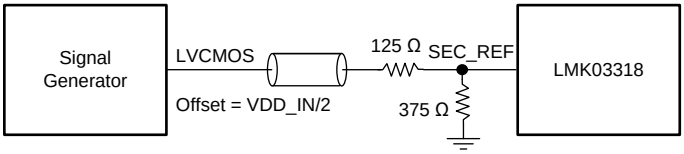

Figure 31. LVCMOS Secondary Input DC Configuration During Device Test

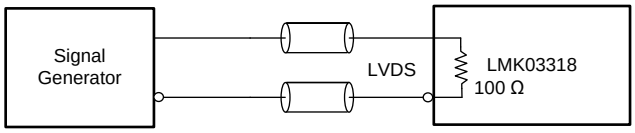

Figure 32. LVDS Input DC Configuration During Device Test

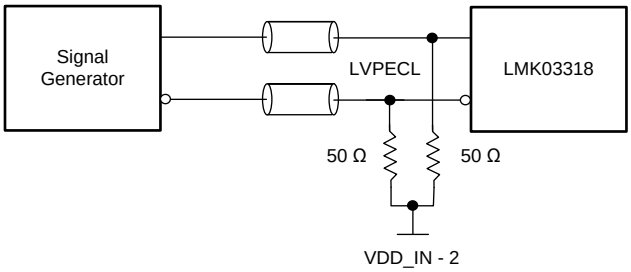

Figure 33. LVPECL Input DC Configuration During Device Test

Test Configurations (continued)

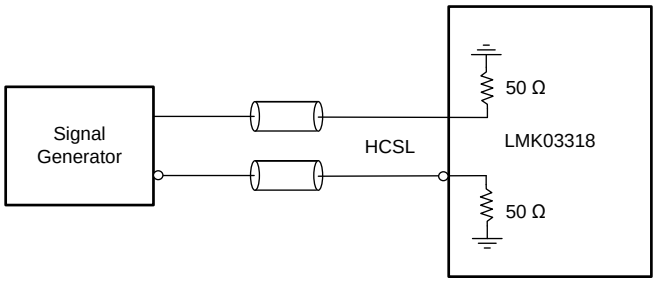

Figure 34. HCSL Input DC Configuration During Device Test

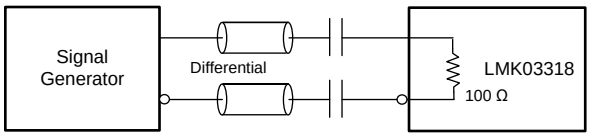

Figure 35. Differential Input AC Configuration During Device Test

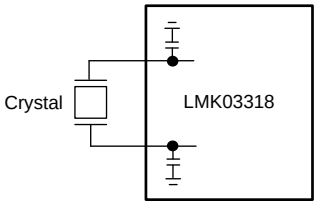

Figure 36. Crystal Reference Input Configuration During Device Test

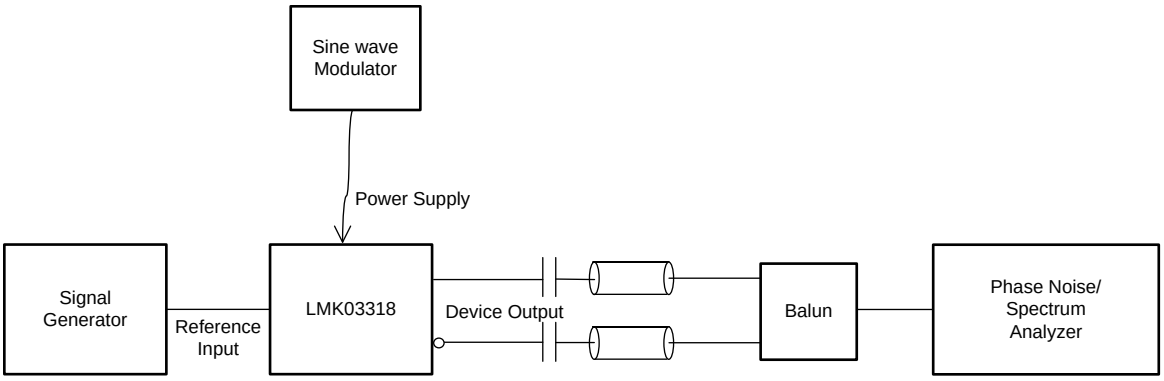

Figure 37. PSNR Test Setup

Copyright © 2015–2016, Texas Instruments Incorporated

Test Configurations (continued)

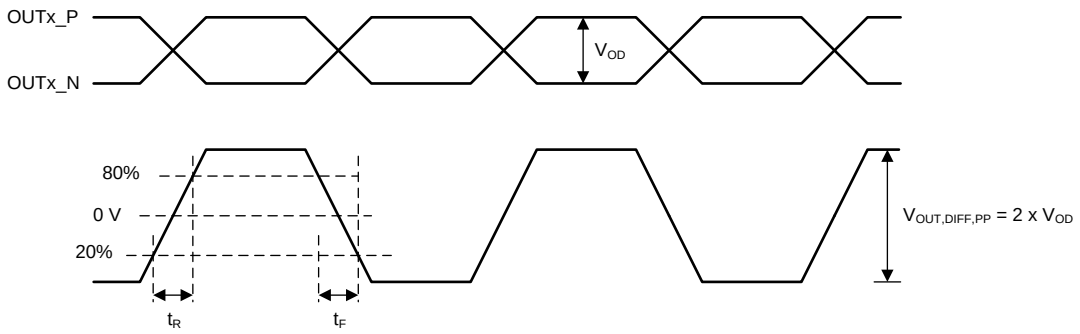

Figure 38. Differential Output Voltage and Rise/Fall Time

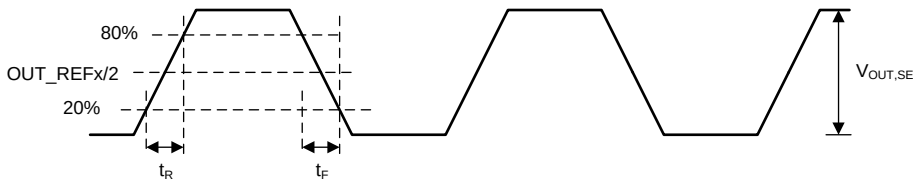

Figure 39. Single Ended Output Voltage and Rise/Fall Time

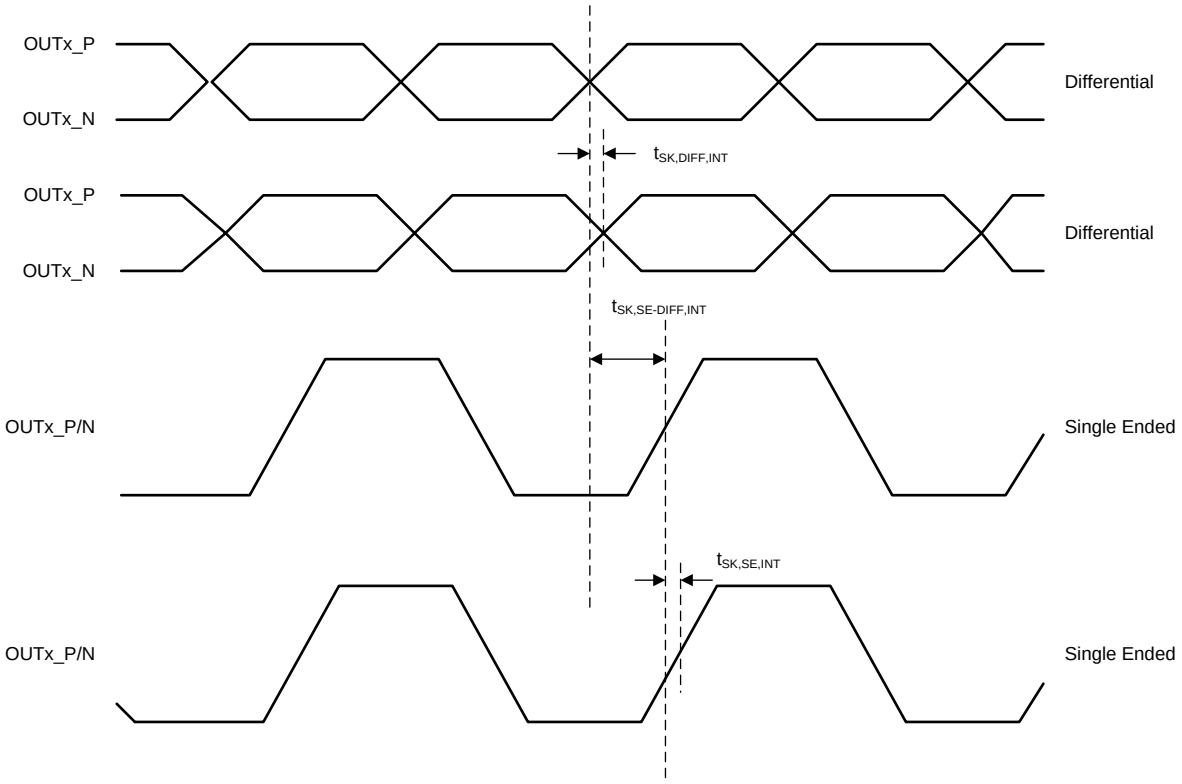

Figure 40. Differential and Single-Ended Output Skew

10 Detailed Description

10.1 Overview

The LMK03318 generates eight outputs with less than 0.2 ps, rms maximum random jitter in integer PLL mode and less than 0.35 ps, rms maximum random jitter in fractional PLL mode with a crystal input or a clean external reference input.

10.2 Functional Block Diagram

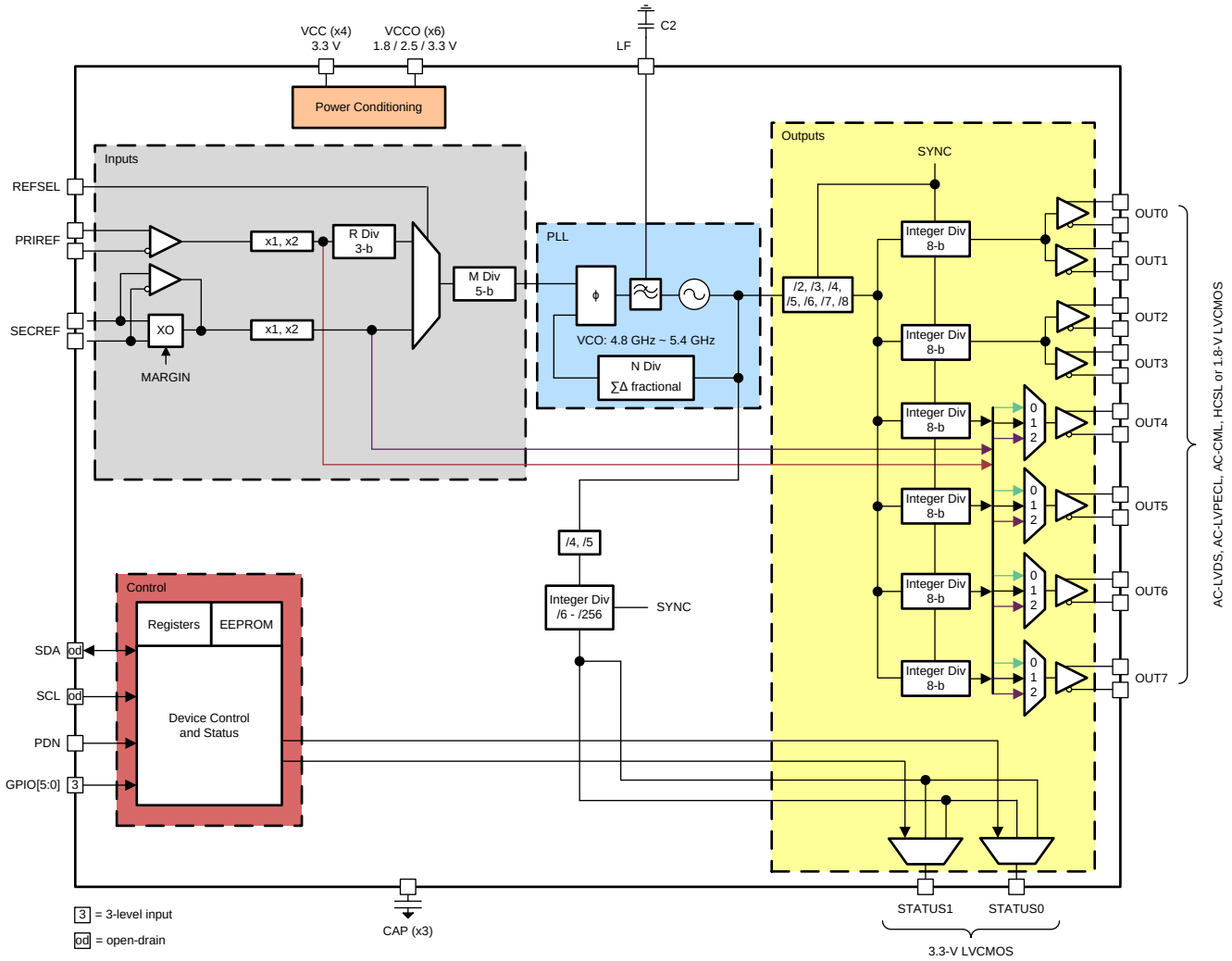

Copyright © 2016, Texas Instruments Incorporated

NOTE

Input and control blocks are compatible with 1.8 V, 2.5 V, or 3.3 V I/O voltage levels.

Copyright © 2015–2016, Texas Instruments Incorporated

10.3 Feature Description

10.3.1 Device Block-Level Description

The LMK03318 includes an on-chip fractional PLL with integrated VCO that supports a frequency range of 4.8 GHz to 5.4 GHz. The PLL block consists of an input selection MUX, a phase frequency detector (PFD), charge pump, on-chip passive loop filter that only needs an external capacitor to ground, a feedback divider that can support both integer and fractional values, and a delta-sigma engine for spur suppression in fractional PLL mode. The universal inputs support single-ended and differential clocks in the frequencies of 1 MHz to 300 MHz; the secondary input additionally supports crystals in the frequencies of 10 MHz to 52 MHz. When the PLL operates with the crystal as its reference, the output frequencies can be margined based on changing the on-chip capacitor loading on each leg of the crystal. Completing the device is the combination of integer output dividers and universal output buffers. The PLL is powered by on-chip low dropout (LDO) linear voltage regulators, and the regulated supply network is partitioned such that the sensitive analog supplies are running from separate LDOs than the digital supplies which use their own LDO. The LDOs provide isolation of the isolation of the PLL from any noise in the external power supply rail with a PSNR of better than –70 dBc at 50 kHz to 1 MHz ripple frequencies at 1.8 V output supplies and better than –80 dBc at 50 kHz to 1 MHz ripple frequencies at > 2.5 V output supplies. The regulator capacitor pins must each be connected to ground by 10 µF capacitors to ensure stability.

10.3.2 Device Configuration Control

Figure 41 shows the relationships between device states, the configuration pins, device initialization and configuration, and device operational modes. In hard-pin-configuration mode, the state of the configuration pins determines the configuration of the device as selected from all device states programmed in the on-chip ROM. In soft-pin-configuration mode, the state of the configuration pins determines the initialized state of the device as programmed in the on-chip EEPROM. In either mode, the host can update any device configuration after the device enables the host interface and the host writes a sequence that updates the device registers. Once the device configuration is set, the host can also write to the on-chip EEPROM for a new set of power-up defaults based on the configuration pin settings in the soft-pin-configuration mode. A system may transition a device from hard-pin mode to soft-pin mode by changing the state of the HW_SW_CTRL pin, then triggering a device power cycling via the PDN pin. In reset mode, the device disables the outputs so that unwanted sporadic activity associated with device initialization does not appear on the device outputs. Table 2 lists the functionality of the GPIO[5:0] pins during hard pin and soft pin modes.

Feature Description (continued)

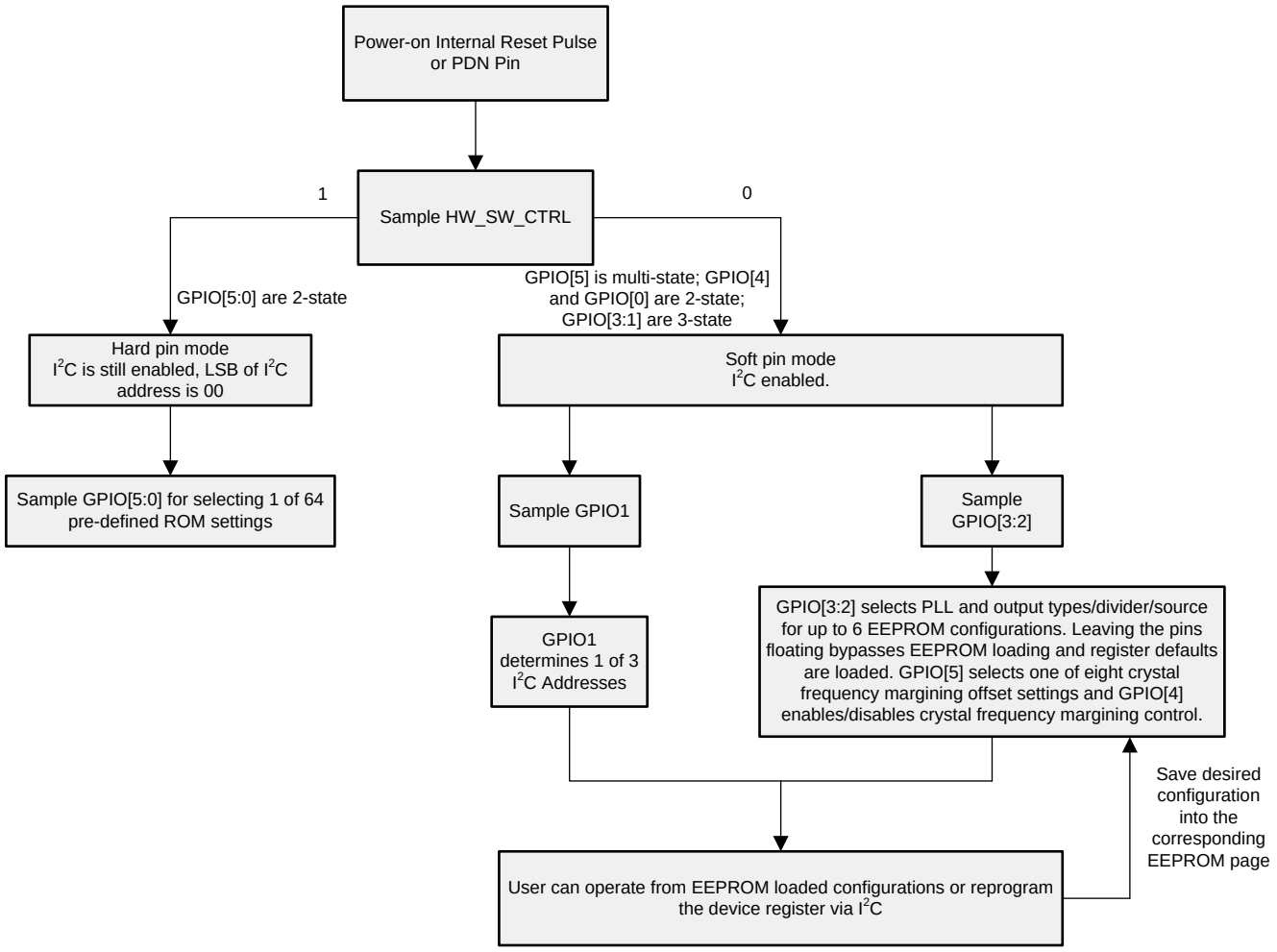

Figure 41. LMK03318 Simplified Programming Flow

Table 2. GPIO Pin Mapping for Hard Pin Mode and Soft Pin Mode

PIN NAME	HARD-PIN MODE		SOFT-PIN MODE	
	FUNCTION	STATE	FUNCTION	STATE
GPIO0	ROM page select for hard pin mode	2	Output synchronization (active low)	2
GPIO1		2	I^2C slave address LSB select	3
GPIO2		2	EEPROM page select for soft pin mode or register default mode	3
GPIO3		2		3
GPIO4		2	Frequency margining enable	2
GPIO5		2	Frequency margining offset select	8

10.3.2.1 Hard-Pin Mode (HW_SW_CTRL = 1)

In this mode, the GPIO[5:0] pins allow hardware pin configuration of the PLL synthesizer, its input clock selection, and output frequency and type selection. I^2C is still enabled, and the LSB of device address is set to 00 . The GPIO pins are 2-state and are sampled or latched at POR — the combination selects one of 64 page settings that are predefined in on-chip ROM. In this mode, automatic output divider and PLL post divider synchronization is performed on power up or upon toggling PDN. Table 14, Table 15, Table 17 and Table 18 show the pre-defined ROM configurations according to the GPIO[5:0] pin settings.

Copyright © 2015–2016, Texas Instruments Incorporated

Following are the blocks that are configured by the GPIO[5:0] pins.

10.3.2.1.1 PLL Block

Sets the PLL synthesizer frequency and loop bandwidth by configuring registers related to the PLL dividers, input frequency doubler, and PLL power down.

10.3.2.1.2 Output Buffer Auto Mute

When the selected source of an output MUX is invalid (for example, the PLL is unlocked or selected reference input is not present), the individual output mute controls will determine output mute state per the ROM default settings (CH_x_MUTE=0x1, CHx_MUTE_LVL=0x3):

1. In differential mode, the positive output node is driven to the internal regulator output voltage rail (when AC coupled to load), and the negative output node is driven to the GND rail.
2. In LVCMOS mode, a DC connection to the receiver is assumed, so the output in a “mute” condition will be forced LOW.

10.3.2.1.3 Input Block

Sets the input type for primary and secondary inputs, selects input MUX type for the PLL, and selects R divider value for primary input to the input MUX.

10.3.2.1.4 Channel Mux

Controls the channel mux selection for each channel.

10.3.2.1.5 Output Divider

Sets the 8-bit output divide value for each channel (/1 to /256).

10.3.2.1.6 Output Driver Format

Selects the output format for each driver pair, or disable channel.

10.3.2.1.7 Status MUX, Divider and Slew Rate

Selects the status pins as either 3.3-V LVCMOS PLL clock outputs or status outputs. When configured as LVCMOS clock outputs, selects divider values and rise/fall time settings.

10.3.2.2 Soft-Pin Programming Mode (HW_SW_CTRL = 0)

In this mode, I^2C is enabled and GPIO[3:2] are purposed as 3-state pins (tied to VDD_DIG, GND or V_{IM}) and used to select one of 6 EEPROM pages and one register default setting (2 of 9 states are invalid). GPIO[0] is also purposed as a 2-state output synchronization (active-low SYNCN) function, GPIO[1] is now purposed as a 3-state I^2C address function to change last 2 bits of I^2C address (ADD; 0x0 is GND, 0x1 is V_{IM}, and 0x3 is VDD_DIG). GPIO[5] is purposed as a multi-state input for the MARGIN function and GPIO[4] is purposed as an input that enables or disables hardware margining. The GPIO pins are sampled/latched at POR.

NOTE

No software reset or power cycling must occur during EEPROM programming or else it will be corrupted. Please refer to *Programming* for more details on the EEPROM programming.

GPIO[3:2] allows hardware pin configuration for the PLL synthesizers, their respective input clock selection modes, the crystal input frequency margining option, all output channel blocks, comprised of channel muxes, dividers, and output drivers. The GPIO inputs[3:2] are sampled and latched at power-on/reset (POR), and selects one of 6 EEPROM pages, which are custom-programmable. When GPIO[3:2] are left floating, EEPROM is not used, and the hardware register default settings are loaded. Table 10, Table 11, Table 12 and Table 13 show the pre-defined EEPROM configurations according to the GPIO[3:2] pin settings.

Below is a brief overview of each block’s register settings configured by the GPIO[3:2] pin modes.

10.3.2.2.1 Device Config Space

8-b for unique identifier programmed to EEPROM that can be used to distinguish between each EEPROM page.

10.3.2.2.2 PLL Block

Sets the PLL synthesizer frequency and loop bandwidth by configuring registers related to the PLL dividers, input frequency doubler, and PLL power down.

10.3.2.2.3 Output Buffer Auto Mute

When the selected source of an output MUX is invalid (for example, the PLL is unlocked or selected reference input is not present), the individual output mute controls determine output mute state per the EEPROM default settings (CH_x_MUTE=0x1, CHx_MUTE_LVL=0x3):

1. In differential mode, the positive output node is driven to the internal regulator output voltage rail (when AC coupled to load), and the negative output node is driven to the GND rail.
2. In LVCMOS mode, we will be assuming a DC connection to the receiver, so the output in a “mute” condition is forced LOW.

10.3.2.2.4 Input Block

Sets the input type for primary and secondary inputs, selects input MUX type for the PLL and selects R divider value for primary input to the input MUX.

10.3.2.2.5 Channel Mux

Controls the channel mux selection for each channel.

10.3.2.2.6 Output Divider

Sets the 8-bit output divide value for each channel (/1 to /256).

10.3.2.2.7 Output Driver Format

Selects the output format for each driver pair, or disables channel.

10.3.2.2.8 Status MUX, Divider and Slew Rate

Selects the status pins as either 3.3-V LVCMOS PLL clock outputs or status outputs. When configured as LVCMOS clock outputs, selects divider values and rise/fall time settings.

10.3.2.3 Register File Reference Convention

Figure 42 shows the method that this document employs to refer to an individual register bit or a grouping of register bits. If a drawing or text references an individual bit the format is to specify the register number first and the bit number second. The LMK03318 contains 124 registers that are 8 bits wide. The register addresses and the bit positions both begin with the number zero (0). A period separates the register address and bit address. The first bit in the register file is address ‘R0.0’ meaning that it is located in Register 0 and is bit position 0. The last bit in the register file is addressR31.7 referring to the 8th bit of register address 31 (the 32nd register in the device). Figure 42 lists specific bit positions as a number contained within a box. A box with the register address encloses the group of boxes that represent the bits relevant to the specific device circuitry in context.

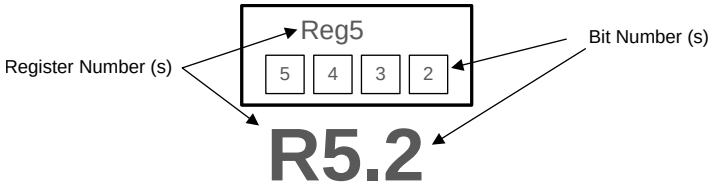

Figure 42. LMK03318 Register Reference Format

Copyright © 2015–2016, Texas Instruments Incorporated

10.4 Device Functional Modes

The PLL in LMK03318 can be configured to accommodate various input and output frequencies either through I^2C programming interface or in the absence of programming, the PLL can be configured by the ROM page, EEPROM page, or register default settings selected through the control pins. The PLL can be configured by setting its Smart Input MUX, Reference Divider, PLL Loop Filter, Feedback Divider, Prescaler Divider and Output Dividers.

For the PLL to operate in closed loop mode, the following condition in Equation 1 has to be met when using primary input or secondary input for the reference clock (F_{REF}).

$F_{VCO} = (F_{REF}/R) \times D \times [(INT + NUM/DEN)/M]$

where

- F_{VCO}: PLL/VCO Frequency
- F_{REF}: Frequency of selected reference input clock
- D: PLL input frequency doubler, 1=Disabled, 2=Enabled
- INT: PLL feedback divider integer value (12 bits, 1 to 4095)
- NUM: PLL feedback divider fractional numerator value (22 bits, 0 to 4194303)
- DEN: PLL feedback divider fractional denominator value (22 bits, 1 to 4194303)
- R: Primary reference divider value (3 bits, 1 to 8); R = 1 for secondary reference
- M: PLL reference input divider value (5 bits, 1 to 32) (1)

The output frequency is related to the PLL/VCO frequency or the reference input frequency (based on the output MUX selection) as given in the following equations.

$F_{OUT} = F_{REF}$ when reference input clock selected by OUTMUX (2)

$F_{OUT} = F_{VCO} / (P \times OUTDIV)$ when PLL is selected by OUTMUX

where

- OUTDIV: Output divider value (8 bits, 1 to 256)
- P: PLL post-divider value (2, 3, 4, 5, 6, 7, 8) (3)

10.4.1 Smart Input MUX

The PLL has a Smart Input MUX. The input selection mode of the PLL can be configured using the 3-state REFSEL pin or programmed via I^2C. The Smart Input MUX supports auto-switching and manual-switching using control pin (or through register). The Smart Input MUX is designed such that glitches created during switching in both auto and manual modes are suppressed at the MUX output.

In the automatic mode, the frequencies of both primary (PRIREF) and secondary (SECREF) input clocks have to be within 2000 ppm. The phase of the input clocks can be any. In order to minimize phase jump at the output, it is recommended to set very low PLL loop bandwidth, set R29.7 = 1, R51.7 = 1, and those outputs that are not be muted should have its respective mute bypass bit in R20 and R21 be set to 0 in order to ensure that these outputs are available during an input switchover event. In the case the primary reference is detected to be unavailable, the input MUX automatically switches from the primary reference to the secondary reference. When primary reference is detected to be available again, the input MUX switches back to the primary reference. When both primary and secondary references are detected as unavailable, the input MUX waits on secondary reference until either the primary or the secondary reference is detected as available again. When both the primary and secondary reference inputs are detected as unavailable, LOS is active, and the PLL outputs are automatically disabled. The timing diagram of an auto-switch at the input MUX is shown in Figure 43.

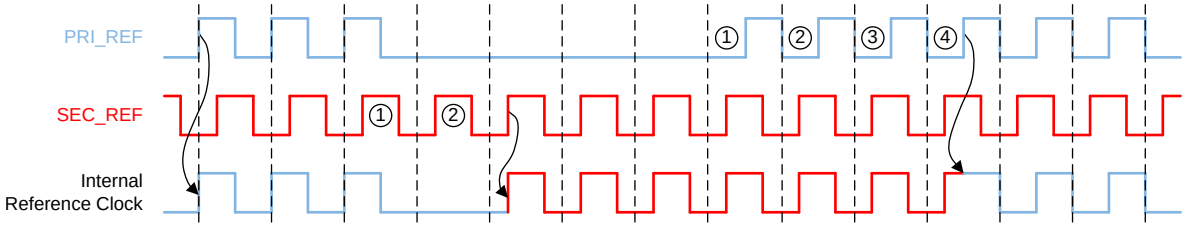

Figure 43. Smart Input MUX Auto-Switch Mode Timing Diagram

Device Functional Modes (continued)

R50[1-0] are the register bits that control the smart input MUX for the PLL and can be programmed through I^2C. Table 3 shows the input clock selection options for the PLL that are supported by the REFSEL pin or via I^2C programming.

Table 3. Input Clock Selection via I^2C Programming or REFSEL Pin

R50.1	R50.0	REFSEL	MODE	PLL REFERENCE
0	0	X	Automatic	PLL prefers primary
0	1	0	Manual	PLL selects primary
0	1	V_{IM}	Manual	PLL selects secondary
0	1	1	Automatic	PLL prefers primary
1	0	X	Manual	PLL selects primary
1	1	X	Manual	PLL selects secondary

For those applications requiring device start-up from a crystal on the secondary input, then do a one-time-only switchover to the primary input once available and when auto-switch on the PLL's smart MUX is enabled, R51.2 can be set to 0 which automatically disables the secondary crystal input path after switchover to the primary input is complete. This removes coupling between the primary and secondary inputs and prevents input Ωcrosstalk components from appearing at the outputs. However, if the auto-switch between primary and secondary is desired at any point of normal device operation, R51.2 must be set to 1, PLL must be set to a very low loop bandwidth, and R20, R21 and R22 must be set to 0x0 in order to ensure minimal phase hit once PLL is relocked after switchover to either primary or secondary inputs. Figure 44 shows flowchart of events triggered when R51.2 is set to 1 or 0 .

Copyright © 2015–2016, Texas Instruments Incorporated

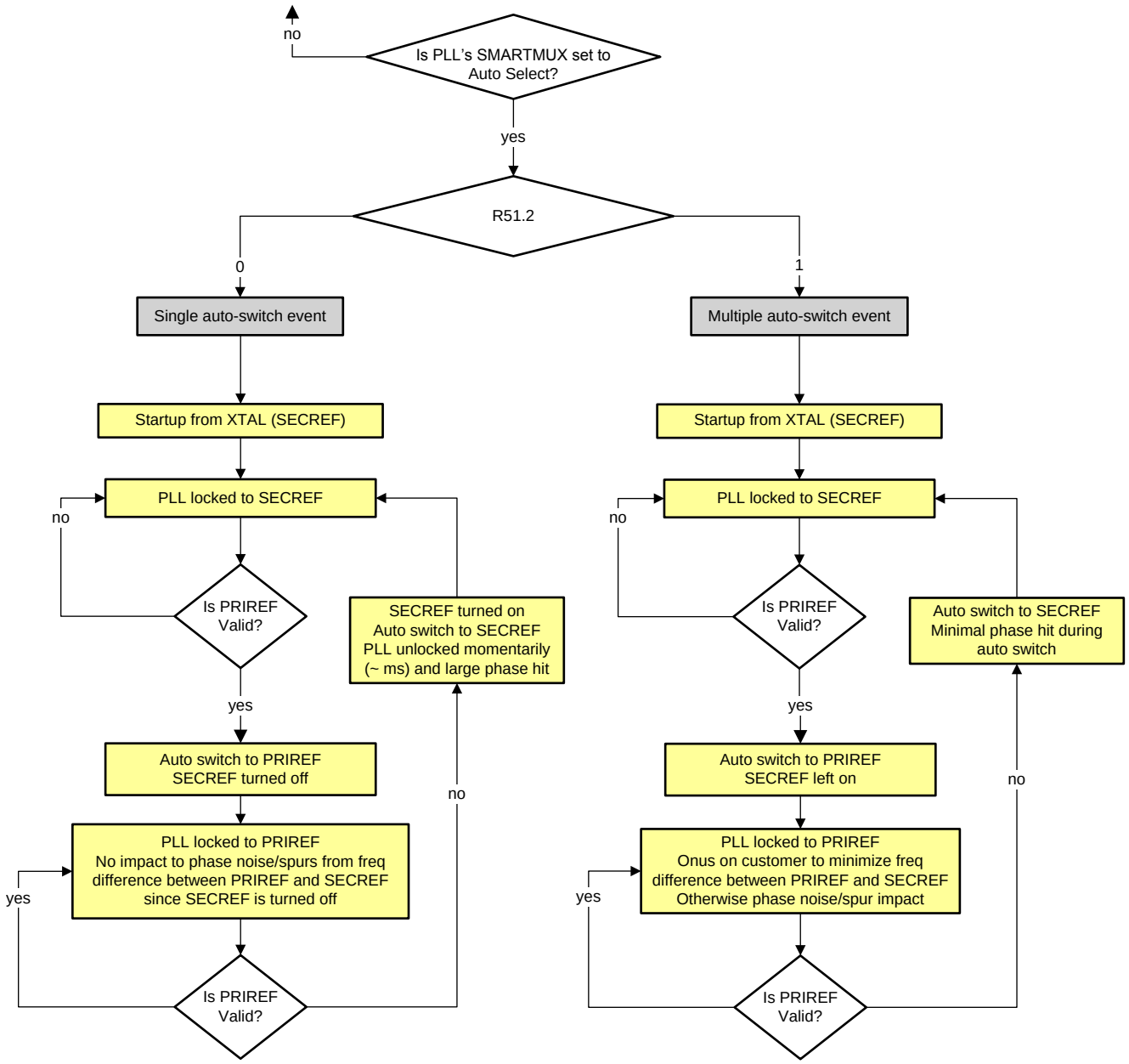

Figure 44. Flowchart Describing Events When R51.2 is Set to 0 or 1

10.4.2 Universal Input Buffer (PRI_REF, SEC_REF)

The primary reference can support differential or single ended clocks. The secondary reference can support differential or single ended clocks or crystal. The differential input buffers on both primary and secondary support internal 50 Ω to ground or 100 Ω termination between P and N followed by on-chip AC coupling capacitors to internal self-biased circuitry. Internal biasing is offered before the on-chip AC coupling capacitors when the clock inputs are AC coupled externally and this is enabled by setting R29.0 = 1 (for primary reference) or R29.1 = 1 (for secondary reference). When the clock inputs are DC coupled, the internal biasing before the on-chip AC coupling capacitors is disabled by settings R29.0 = 0 (for primary reference) or R29.1 = 0 (for secondary reference). Figure 45 shows the differential input buffer termination options implemented on both primary and secondary and the switches (SWLVDS, SWHCSL, SWAC) are controlled by R29[5-0]. Table 4 shows the primary and secondary buffer configuration matrix for LVPECL, CML, LVDS, HCSL and LVCMOS inputs.

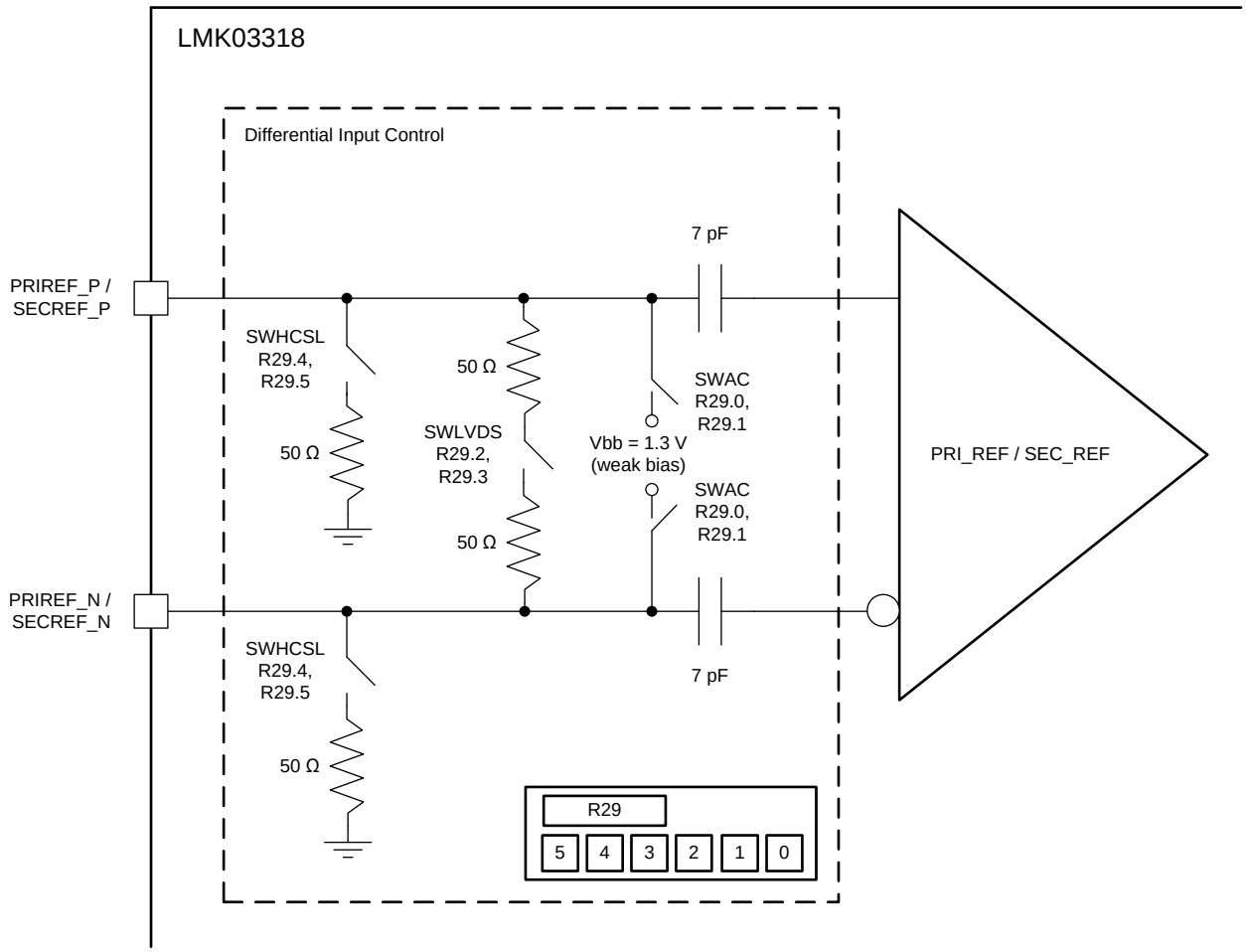

Figure 45. Differential Input Buffer Termination Options on Primary and Secondary Reference

Table 4. Input Buffer Configuration Matrix on Primary and/or Secondary Reference (1)

R50.5 / R50.7	R50.4 / R50.6	R29.4 / R29.5	R29.2 / R29.3	R29.0 / R29.1	MODE	EXTERNAL COUPLING	TERMINATION	BIASING
0	1	0	1	1	HCSL	AC	Internal	Internal
0	1	0	1	1	LVDS	AC	Internal	Internal
0	1	0	1	1	LVPECL	AC	Internal	Internal
0	1	0	1	1	CML	AC	Internal	Internal
0	1	1	0	0	HCSL	DC	Internal	External

(1) When termination is set to External, internal on-chip termination of LMK03318 should be disabled.

Copyright © 2015–2016, Texas Instruments Incorporated

Table 4. Input Buffer Configuration Matrix on Primary and/or Secondary Reference(1) (continued)

R50.5 / R50.7	R50.4 / R50.6	R29.4 / R29.5	R29.2 / R29.3	R29.0 / R29.1	MODE	EXTERNAL COUPLING	TERMINATION	BIASING
0	1	0	1	0	LVDS	DC	Internal	External
0	1	0	0	0	LVPECL	DC	External	External
0	1	0	0	0	CML	DC	External	External
0	0	0	0	0	LVCMOS	DC	N/A	N/A

Figure 46 through Figure 55 show recommendations for interfacing primary or secondary inputs of the LMK03318 with LVCMOS, LVPECL, LVDS, CML and HCSL drivers, respectively.

NOTE

The secondary reference accepts up to 2.6-V maximum swing when LVCMOS input option is selected.

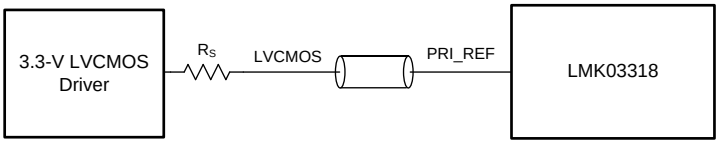

Figure 46. Interfacing LMK03318 Primary Input With 3.3-V LVCMOS Signal

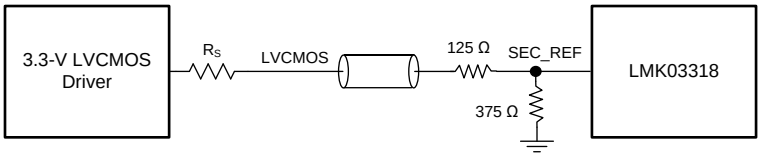

Figure 47. Interfacing LMK03318 Secondary Input With 3.3-V LVCMOS Signal

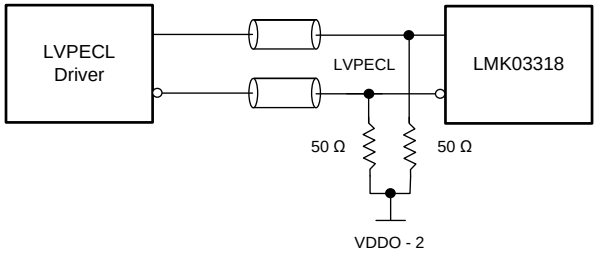

Figure 48. DC Coupling LMK03318 Inputs With LVPECL Signal

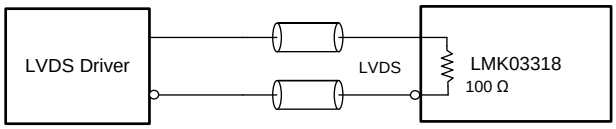

Figure 49. DC Coupling LMK03318 Inputs with LVDS Signal

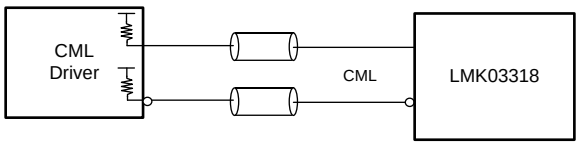

Figure 50. DC Coupling LMK03318 Inputs with CML Signal

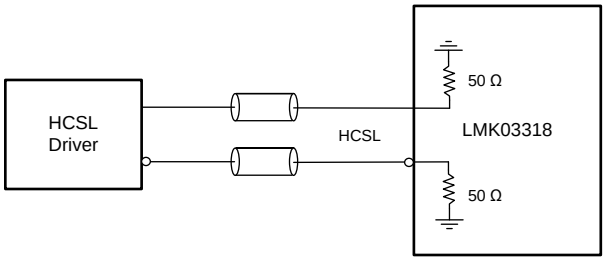

Figure 51. DC Coupling LMK03318 Inputs With HCSL Signal

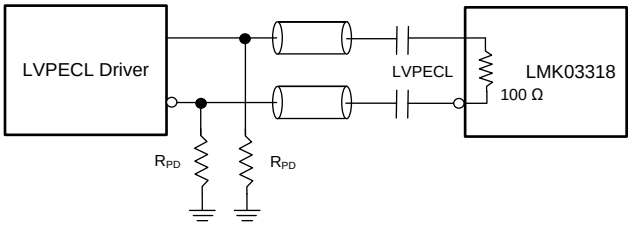

Figure 52. AC Coupling LMK03318 Inputs With LVPECL Signal (internal biasing enabled)

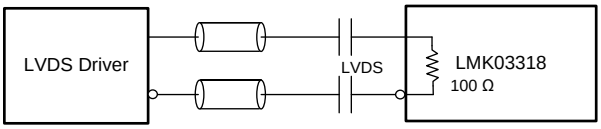

Figure 53. AC Coupling LMK03318 Inputs With LVDS Signal (internal biasing enabled)

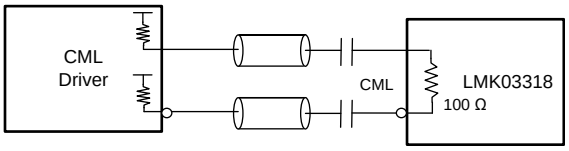

Figure 54. AC Coupling LMK03318 Inputs With CML Signal (internal biasing enabled)

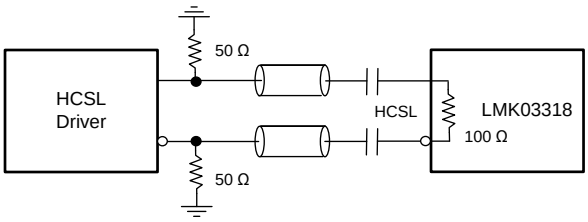

Figure 55. AC Coupling LMK03318 Inputs With HCSL Signal (internal biasing enabled)

10.4.3 Crystal Input Interface (SEC_REF)

The LMK03318 implements an input crystal oscillator circuitry, known as the Pierce oscillator, shown in Figure 56. It is enabled when R50.7, R50.6, and R29.1 are set to 1, 0, and 1 respectively. The crystal oscillator circuitry includes programmable on-chip capacitances on each leg of the crystal and a damping resistor intended to minimize overdriven condition of the crystal. The recommended oscillation mode of operation for the input crystal is fundamental mode, and the recommended type of circuit for the crystal is parallel resonance with low or high pullability.

Copyright © 2015–2016, Texas Instruments Incorporated

A crystal's load capacitance refers to all capacitances in the oscillator feedback loop. It is equal to the amount of capacitance seen between the terminals of the crystal in the circuit. For parallel resonant mode circuits, the correct load capacitance is necessary to ensure the oscillation of the crystal within the expected parameters. The LMK03318 has been characterized with 9 pF parallel resonant crystals with maximum motional resistance of 30 Ω and maximum drive level of 300 µW.

The normalized frequency error of the crystal, due to load capacitance mismatch, can be calculated as:

$$\frac{\Delta f}{f} = \frac{C_S}{2(C_{L,R} + C_0)} - \frac{C_S}{2(C_{L,A} + C_0)}$$

where

- C_S is the motional capacitance of the crystal
- C_0 is the shunt capacitance of the crystal
- $C_{L,R}$ is the rated load capacitance for the crystal
- $C_{L,A}$ is the actual load capacitance in the implemented PCB for the crystal
- Δf is the frequency error of the crystal
- f is the rated frequency of the crystal. (4)

The first 3 parameters can be obtained from the crystal vendor.

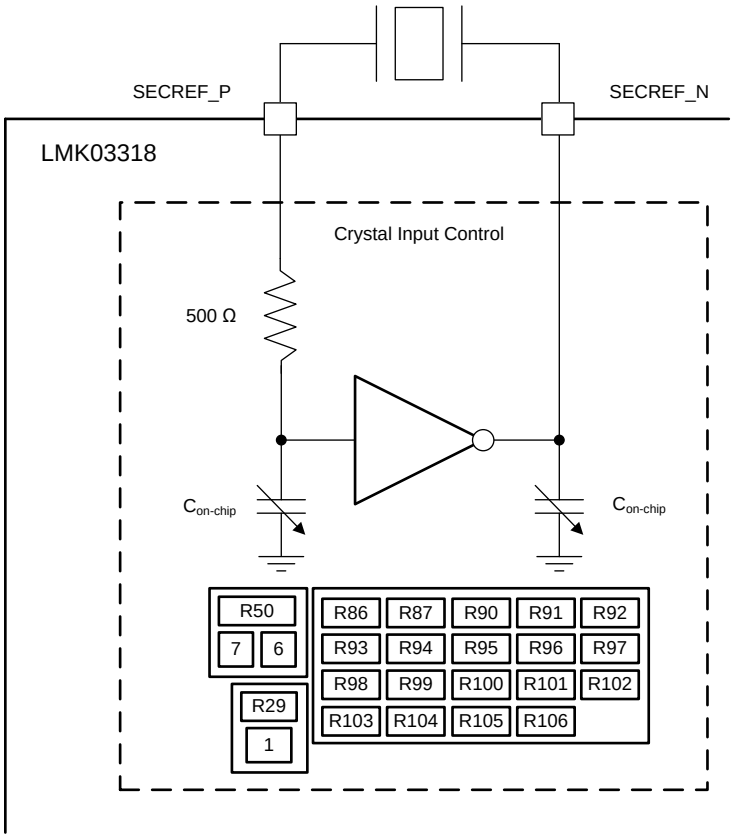

Figure 56. Crystal Input Interface on Secondary Reference

If reducing frequency error of the crystal is of utmost improtance, a crystal with low pullability should be used. If frequency margining or frequency spiking is desired, a crystal with high pullability should be used to ensure that the desired frequency offset is added to the nominal oscillation frequency. A total of ±50 ppm pulling range is obtained with a crystal whose ratio of shunt capacitance to motional capacitance (C0/C1) is no more than 250.

The programmable capacitors on LMK03318 can be tuned from 14 pF to 24 pF in steps of 14 fF using either an analog voltage on GPIO5 in soft pin mode or via I^2C in soft pin or hard pin mode. When using crystals with low pullability, preferred method is to program R86.3 = 1, R86.2 = 0, and program the appropriate binary code to R104 and R105, in this exact order, that sets the required on-chip load capacitance for least frequency error. GPIO4 pin must be tied to VDD, and GPIO5 pin should be floating when device is operating in soft-pin mode. Table 4 shows the binary code for on-chip load capacitance on each leg of crystal.

When using crystals with high pullability, same method as above can be repeated for setting a fixed frequency offset to the nominal oscillation frequency according to Equation 4. In case of a closed loop system where the crystal frequency can be dynamically changed based on a control signal, the LMK03318 must operate in soft-pin mode, R86.3 must be programmed to 0, and R86.2 must be programmed to 1. The GPIO5 pin is now configured as an 8-level input with a full-scale range of 0 V to 1.8 V, and every 200 mV corresponds to a frequency change, according to Equation 4. There are three possibilities to enable margining feature with GPIO5:

- Programming R86.3 = 0 and R86.2 = 1. In this case, status of GPIO4 pin is ignored.
- When R86.3 = 0 and R86.2 = 0 is programmed, GPIO4 must be tied to GND. Tying GPIO4 to VDD disables GPIO5 for margining purposes and R94 and R95 determine the on-chip load capacitance for the crystal. If any frequency offset is desired at the output, the appropriate binary code should be programmed to R94 and R95.
- When R86.3 = 1 and R86.2 = 0 is programmed, GPIO4 must be tied to GND. Tying GPIO4 to VDD disables GPIO5 for margining purposes and R104 and R105 determine the on-chip load capacitance for the crystal. If any frequency offset is desired at the output, the appropriate binary code should be programmed to R104 and R105.

There are two possibilities to drive the GPIO5 pin:

- The first method is to achieve the desired voltage between 0 V to 1.8 V according to Analog Input Characteristics (GPIO[5]). The pulldown resistor value sets the voltage on GPIO[5] pin that falls within one of eight settings whose pre-programmed on-chip crystal load capacitances are set by R88, R89, R90, R91, R92, R93, R94, R95, R96, R97, R98, R99, R100, R101, R102 and R103.
- The second method is using a low-pass filtered PWM signal to drive the 8-level GPIO5 pin as shown in Figure 57. The PWM signal could be generated from the frequency difference between a highly stable TCXO and the output of LMK03318 that is provided as a feedback into the GPIO5 pin and used to adjust the on-chip load capacitance on the crystal input in order to reduce frequency errors from the crystal. This is a quick alternative that produces a frequency error at the LMK03318's output and could be acceptable to any application when compared to a full-characterization with a chosen crystal to understand the exact load pulling required to minimize frequency error at the LMK03318's output. More details on frequency margining are provided in Application and Implementation.

Copyright © 2015–2016, Texas Instruments Incorporated

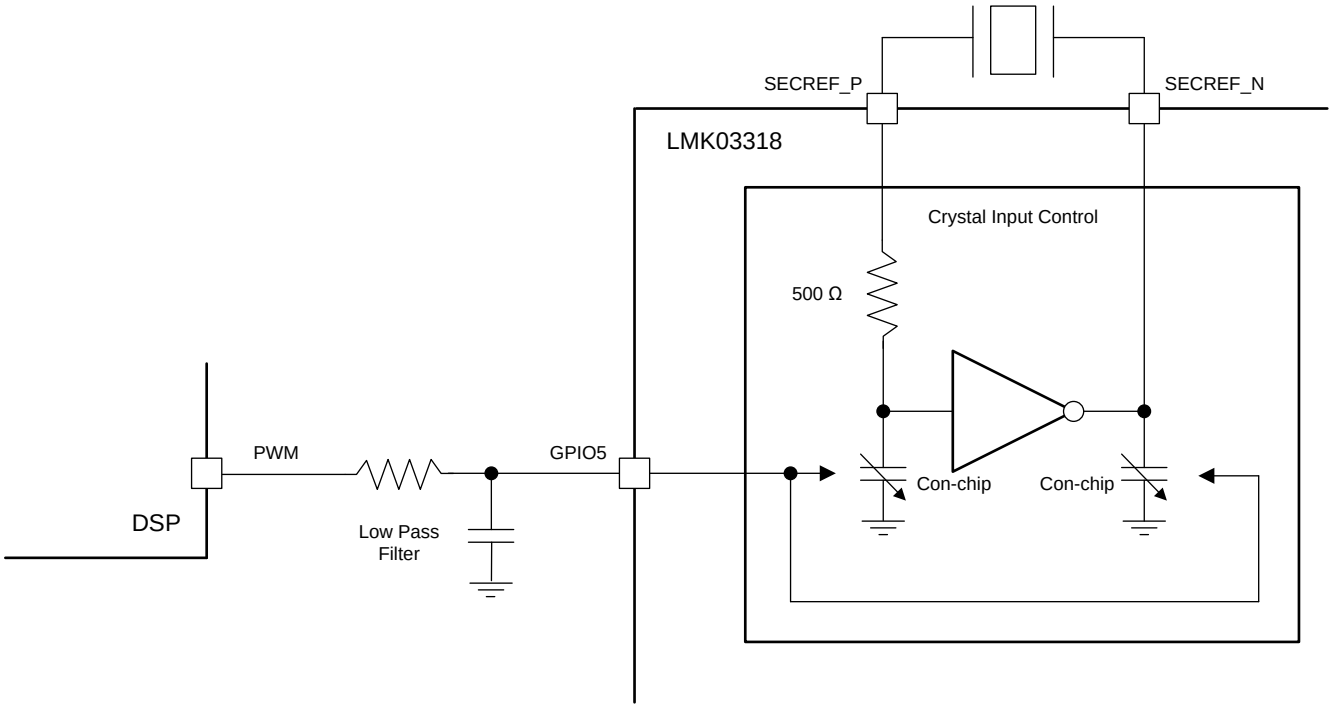

Figure 57. Crystal Load Capacitance Compensation using PWM Signal

The incremental load capacitance for each step should be programmed to R88, R89, R90, R91, R92, R93, R94, R95, R96, R97, R98, R99, R100, R101, R102, and R103 according to the chosen crystal's trim sensitivity specifications. The least-significant bit programmed to any of the XO offset register corresponds to a load capacitance delta of about 0.02 pF on the crystal input pins.

Good layout practices are fundamental to the correct operation and reliability of the oscillator. It is critical to locate the crystal components very close to the SECREF_P and SECREF_N pins to minimize routing distances. Long traces in the oscillator circuit are a very common source of problems. Don't route other signals across the oscillator circuit, and make sure power and high-frequency traces are routed as far away as possible to avoid crosstalk and noise coupling. If drive level of the crystal should be reduced, a damping resistor (less than 500 Ω) should be accommodated in the layout between the crystal leg and SECREF_P pin. Vias in the oscillator circuit are recommended primarily for connections to the ground plane. Don't share ground connections; instead, make a separate connection to ground for each component that requires grounding. If possible, place multiple vias in parallel for each connection to the ground plane. The layout must be designed to minimize stray capacitance across the crystal to less than 2 pF total under all circumstances to ensure proper crystal oscillation.

10.4.4 Reference Doubler

The primary and secondary references each have a frequency doubler that can be enabled by programming R57.4 = 1 for the primary reference and R72.4 = 1 for the secondary reference. Enabling the doubler allows a higher comparison frequency for the PLL and results in a 3-dB reduction in the in-band phase noise of the LMK03318 device's outputs. However, enabling the doubler poses the requirement of less than 0.5% duty cycle distortion of its reference input to minimize high spurious signals in the LMK03318's outputs. If the reference input duty cycle is requirement is not met, the PLL's higher order loop filter components (R3 and C3) can be utilized to suppress the reference input spurs.

10.4.5 Reference Divider (R)

The reference (R) divider is a continuous 3-b counter that is present on the primary reference before the smart input MUX of the PLL. The output of the R divider sets the input frequency for the smart input MUX and the auto switch capability of the smart input MUX can then be employed as long as the secondary input frequency is no more than 2000 ppm different from the output of the R divider, which is programmed in R52 for the PLL.

10.4.6 Input Divider (M)

The input (M) divider is a continuous 5-b counter that is present after the smart input MUX of the PLL. The output of the M divider sets the PFD frequency to the PLL and should be in the range of 1 MHz to 150 MHz. The M divider is programmed in R53 for the PLL.

10.4.7 Feedback Divider (N)

The N divider of the PLL includes fractional compensation and can achieve any fractional denominator (DEN) from 1 to 4,194,303. The integer portion, INT, is the whole part of the N divider value and the fractional portion, NUM / DEN, is the remaining fraction. N, NUM, and DEN are programmed in R58, R59, R60, R61, R62, R63, R64, and R65 for the PLL. The total programmed N divider value, N, is determined by: N = INT + NUM / DEN. The output of the N divider sets the PFD frequency to the PLL and should be in the range of 1 MHz to 150 MHz.

10.4.8 Phase Frequency Detector (PFD)

The PFD of the PLL takes inputs from the input divider output and the feedback divider output and produces an output that is dependent on the phase and frequency difference between the two inputs. The allowable range of frequencies at the inputs of the PFD is from 1 MHz to 150 MHz.

10.4.9 Charge Pump

The PLL has charge pump slices of 0.4 mA, 0.8 mA, 1.6 mA, or 6.4 mA. These slices can be selected in the following combinations to vary the charge pump current from 0.4 mA to 6.4 mA by programming R57[3-0] for the PLL.

Copyright © 2015–2016, Texas Instruments Incorporated

10.4.10 Loop Filter

The PLL supports programmable loop bandwidth from 200 Hz to 1 MHz. The loop filter components, R2, C1, R3, C3, can be configured by programming R67, R68, R69 and R70 for the PLL. C2 for the PLL is an external component that is added on the LF pin. When the PLL is configured in the fractional mode, R69.0 should be set to 1 and R118[2-0] should be set to 0x7. When the PLL is configured in integer mode, R69.0 should be set to 0 and R118[2-0] should be set to 0x3 for second-order (NOTE: R69 should be set to 0x0) or 0x7 for third-order respectively. When the PLL's loop bandwidth is desired to be set to 200 Hz, R120.0 should be set to 0. Figure 58 shows the loop filter structure of the PLL.

It is important to set the PLL to best possible bandwidth to minimize output jitter. A high bandwidth (≥ 100 kHz) provides best input signal tracking and is therefore desired with a clean input reference (clock generator mode). A low bandwidth (≤ 1 kHz) is desired if the input signal quality is unknown (jitter cleaner mode). TI provides the WEBENCH Clock Architect that makes it easy to select the right loop filter components.

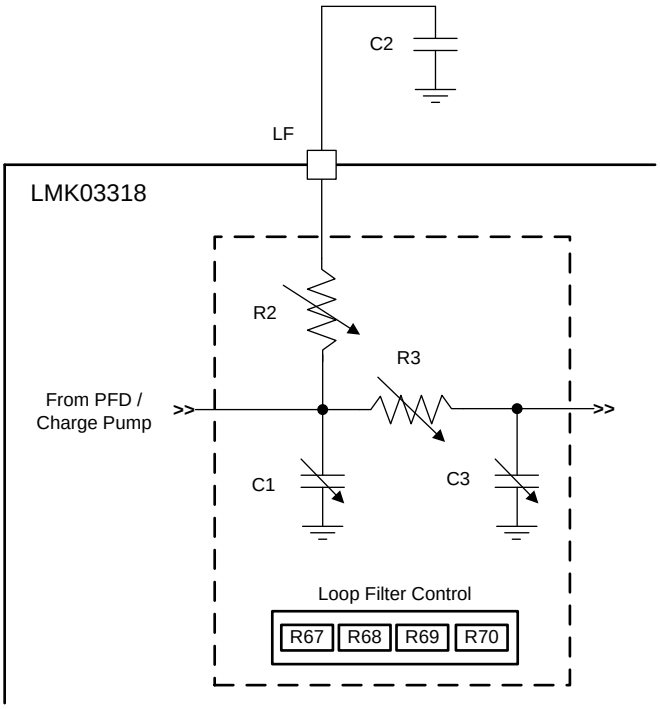

Figure 58. Loop Filter Structure of PLL

10.4.11 VCO Calibration

The PLL of the LMK03318 includes an LC VCO that is designed using high-Q monolithic inductor to oscillate between 4.8 GHz and 5.4 GHz and has low phase-noise characteristics. The VCO must be calibrated to ensure that the clock outputs deliver optimal phase noise performance. Fundamentally, a VCO calibration establishes an optimal operating point within the tuning range of the VCO. While transparent to the user, the LMK03318 and the host system perform the following steps comprising a VCO calibration sequence:

1. **Normal Operation** - When the LMK03318 is in normal (operational) mode, the state of the power-down pin (PDN) is high.
2. **Entering the reset state** - If the user wishes to initialize the selected pin mode default settings (from ROM, EEPROM, or register default) and initiate a VCO calibration sequence, then the host system must place the device in reset via the PDN pin, or via software reset (R12.7) through I^2C, or by removing and restoring device power. Pulling the PDN pin low low or setting R12.7 = 0 places the device in the reset state.
3. **Exiting the reset state** – The device calibrates the VCO either by exiting the device reset state or through the device reset command initiated via the host interface. Exiting the reset state occurs automatically after power is applied and/or the system restores the state of the PDN or R12.7 from the low to high state. Exiting the reset state using the PDN pin causes the selected pin mode defaults to be loaded/reloaded into the device register bank. Invoking software reset via R12.7 does not re-initialize the registers; rather, the device

retains settings related to the current clock frequency plan. Using this method allows for a VCO calibration for a frequency plan other than the default state (i.e. the device calibrates the VCO based on the settings current register settings). The nominal state of this bit is high. Writing this bit to a low state and then returning it to the high state invokes a device reset without restoring the pin mode.

4. **Device stabilization** – After exiting the reset state as described in Step 3, the device monitors internal voltages and starts a reset timer. Only after internal voltages are at the correct level and the reset time has expired will the device initiate a VCO calibration. This ensures that the device power supplies and reference inputs have stabilized prior to calibrating the VCO.
5. **VCO Calibration** - The LMK03318 calibrates the VCO. During the calibration routine, the device mutes output channels configured with their respective auto-mute control enabled, so that they generate no spurious clock signals. After a successful calibration routine, the PLL will lock the VCO to the selected reference input.

10.4.12 Fractional Circuitry

The delta-sigma modulator is a key component of the fractional circuitry and is involved in noise shaping for better phase noise and spurs in the band of interest. The order of the delta sigma modulator is selectable from integer mode to third order and can be programmed in R66[1-0] for the PLL. There are also several dithering modes that are also programmed in R66[3-2] for the PLL.

10.4.12.1 Programmable Dithering Levels

If used appropriately, dithering may be used to reduce sub-fractional spurs, but if used inappropriately, it can actually create spurs and increase phase noise. Table 5 provides guidelines for the use of dithering based on the fractional denominator, after the fraction is reduced to lowest terms.

Table 5. Dithering Recommendations

FRACTION	RECOMMENDATION	COMMENTS
Fractional Numerator = 0	Disable Dithering	This is often the worst case for spurs, and can actually be turned into the best case by disabling dithering. Performance is then similar to integer mode.
Equivalent Denominator < 20	Disable Dithering	These fractions are not well randomized and dithering will likely create phase noise and spurs.
Equivalent denominator is not divisible by 2 or 3	Disable Dithering	There will be no sub-fractional spurs, so dithering is likely not to be very effective.
Equivalent denominator > 200 and is divisible by 2 or 3	Consider Dithering	Dithering may help reduce the sub-fractional spurs, but understand it may degrade the PLL phase noise.

10.4.12.2 Programmable Delta Sigma Modulator Order

The programmable fractional modulator order gives the opportunity to better optimize phase noise and spurs. Theoretically, higher order modulators push out phase noise to farther offsets, as described in Table 6.

Table 6. Delta Sigma Modulator Order Recommendations

ORDER	APPLICATIONS
Integer Mode (Order = 0)	If the fractional numerator is zero, it is best to run the PLL in integer mode to minimize phase noise and spurs.
First Order Modulator	When the equivalent fractional denominator is 6 or less, the first order modulator theoretically has lower phase noise and spurs, so it always makes sense in these situations. When the fractional denoninator is between 6 and about 20, consider using the first order modulator because the spurs might be far enough outside the loop bandwidth that they will be filtered. The first order modulator also does not create any sub-fractional spurs or phase noise.
Second and Third Order Modulator	The choice between 2nd and 3rd order modulator tends to be a little more application specific. If the fractional denominator is not divisible by 3, then the second and third order modulators will have spurs in the same offsets, so the third is generally better for spurs. However, if stronger levels of dithering is used, the third order modulator will create more close-in phase noise than the second order modulator.

Copyright © 2015–2016, Texas Instruments Incorporated

Figure 59 and Figure 60 give an idea of the theoretical impact of the delta sigma modulator order on the shaping of the phase noise and spurs. In terms of phase noise, this is what one would theoretically expect if strong dithering was used for a well-randomized fraction. Dithering can be set to different levels or even disabled and the noise can be eliminated. In terms of spurs, they can change based on fraction, but they will theoretically pushed out to higher phase detector frequencies. However, one must be aware that these are just THEORETICAL graphs and for offsets that are less than 5% of the phase detector frequency, other factors can impact the noise and spurs. In Figure 59, the curves all cross at 1/6th of the phase detector frequency and that this transfer function peaks at half of the phase detector frequency, which is assumed to be well outside the loop bandwidth. Figure 60 shows the impact of the phase detector frequency on the modulator noise.

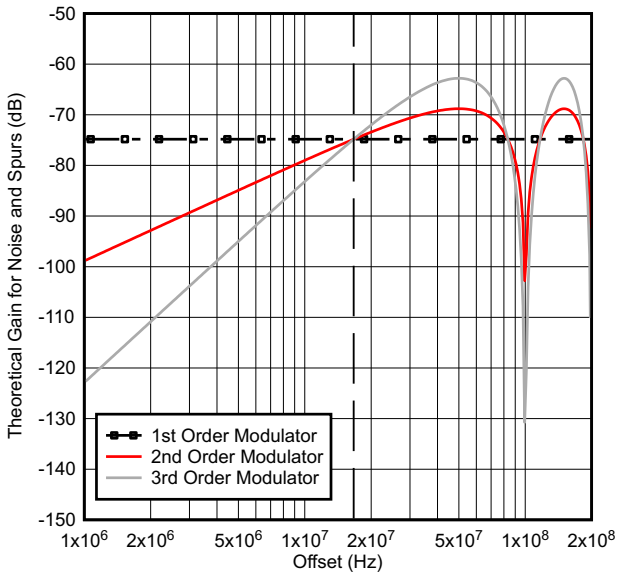

Figure 59. Theoretical Delta Sigma Noise Shaping for a 100 MHz Phase Detector Frequency

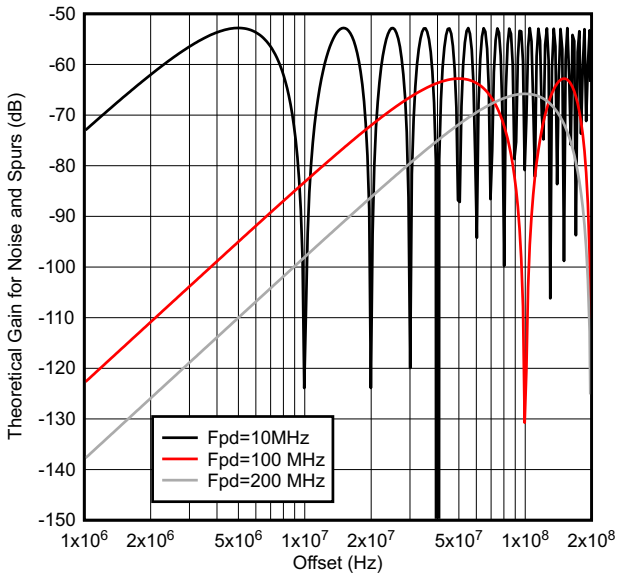

Figure 60. Theoretical Delta Sigma Noise Shaping for 3rd Order Modulator

10.4.13 Post Divider

Each PLL has a post divider that supports divide-by 2, 3, 4, 5, 6, 7, 8 from the VCO frequency and distributed to the output section by programming R56[4-2] for PLL and R71[4-2] for PLL2.

10.4.14 High-Speed Output MUX

The output section is made up of four high-speed output MUX's. Each of the four MUX able to select between primary reference, secondary reference or the divided PLLclock by programming R37[7-6], R39[7-6], R41[7-6], and R43[7-6]. Each of the four MUX's distributes individually to outputs 4, 5, 6, 7. When reference doubler is enabled and any output MUX selects that reference input, the output frequency will be the same as the reference frequency (non-doubled) but the output phase could be the same or complementary of the reference input.

10.4.15 High-Speed Output Divider

There are six high-speed output dividers and each supports divide values of 1 to 256. Outputs 0 and 1 share an output divider, as well as outputs 2 and 3. Outputs 4, 5, 6, 7 have their own individual output dividers. The divide values are programmed in R33, R36, R38, R40, R42, and R44. These output dividers also support coarse frequency margining for all output divide values greater than 8 and can be enabled on any output channel by setting the appropriate bit in R24 to a 1. In such a use case, a dynamic change in the output divider value via I^2C ensures that there are no glitches at the output irrespective of when the change is initiated. Depending on the VCO frequency and output divide values, as low as a 5% change can be initiated in the output frequency. An example case of coarse frequency margining on an output is shown in Figure 61.

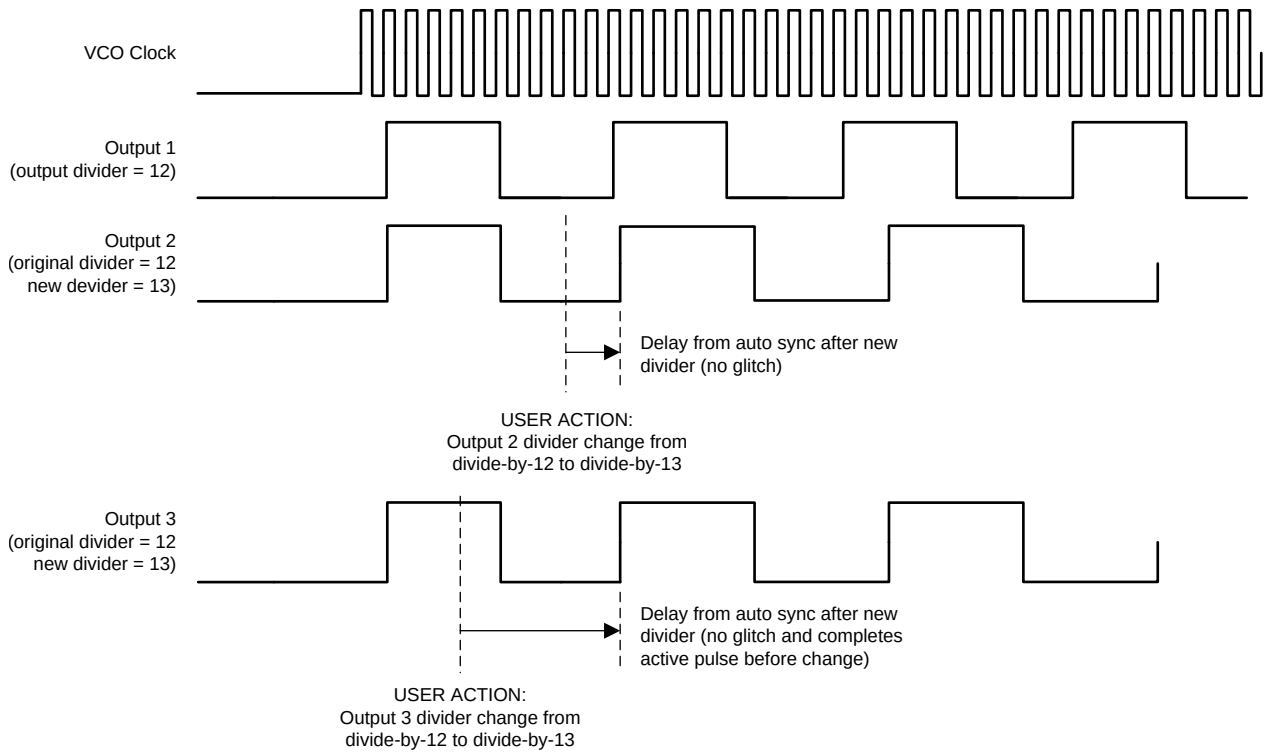

Figure 61. Simplified Diagram for Coarse Frequency Margining

10.4.16 High-Speed Clock Outputs

Each output can be configured as AC-LVPECL, AC-LVDS, AC-CML, HCSL or LVCMOS by programming R31, R32, R34, R35, R37, R39, R41, and R43. Each output has the option to be muted or not, in case the source from which it is derived becomes invalid, by programming R22. An invalid source could be a primary or secondary reference that is no longer present or any PLL that is unlocked. When outputs are to be muted, R20 and R21 must each be programmed to 0xFF. Outputs 0 and 1 share an output supply (VDDO_01), as well as outputs 2 and 3 (VDDO_23). Outputs 4, 5, 6, 7 have individual output supplies (VDDO_4, VDDO_5, VDDO_6, VDDO_7). Each output supply can be independently set to 1.8 V, 2.5 V or 3.3 V. When a particular output is desired to be disabled, the bits [5:0] in the corresponding output control register (R31, R32, R34, R35, R37, R39, R41 or R43) must be set to 0x00. If any of outputs 4, 5, 6, and 7 and their output dividers are disabled; their corresponding supplies can be connected to GND.

Copyright © 2015–2016, Texas Instruments Incorporated

The AC-LVDS, AC-CML, and AC-LVPECL output structure is given in Figure 62 where the tail currents can be programmed to either 4 mA, 6 mA, or 8 mA to generate output voltage swings that are compatible with LVDS, CML or LVPECL, respectively. Since this output structure is GND referenced, the output supplies can be operated from 1.8 V, 2.5 V or 3.3 V and offer lower power dissipation compared to traditional LVDS, CML, or LVPECL structures without any impact on jitter performance or other AC or DC specifications. Interfacing to LVDS, CML or LVPECL receivers are done with just an external AC-coupling capacitor for each output. No source termination is needed since the on-chip termination is automatically enabled when selecting AC-LVDS, AC-CML, or AC-LVPECL for good impedance matching to 50 Ω interconnects.

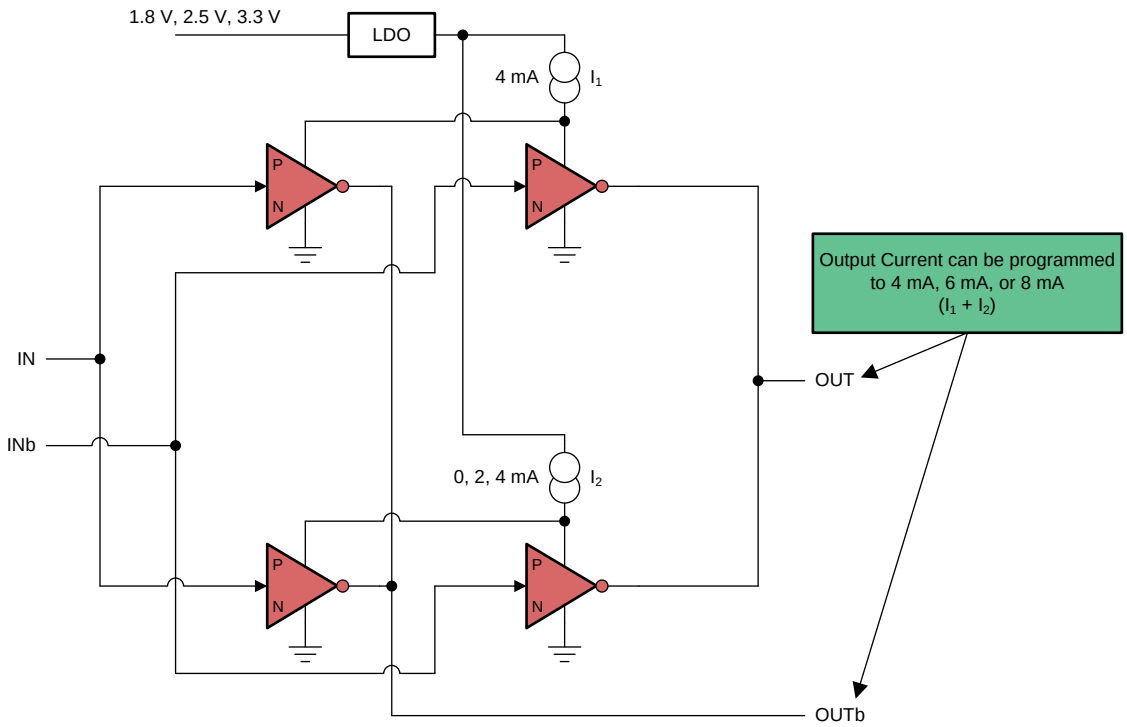

Figure 62. Structure of AC-LVDS, AC-CML, and AC-LVPECL Output Stage

The HCSL output structure is open drain and can be direct coupled or AC coupled to HCSL receivers with appropriate termination scheme. This output strcture supports either on-chip 50 Ω termination or off-chip 50 Ω termination. The on-chip 50 Ω termination is provided primarily for convenience when driving short traces. In the case of driving long traces possibly through a connector, the on-chip termination should be disabled and a 50 Ω to GND termination at the receiver should be implemented. The output supplies can be operated from 1.8 V, 2.5 V or 3.3 V without any impact on jitter performance or other AC or DC specifications.

The LVCMOS outputs on each side (P and N) can be configured individually to be complementary or in-phase or can be turned off (high output impedance). The LVCMOS outputs are always at 1.8 V logic level irrespective of the output supply. In case 3.3-V LVCMOS outputs are needed, STATUS1 and/or STATUS0 can be configured as 3.3-V LVCMOS outputs.

The following figures show recommendations for interfacing between LMK03318's high-speed clock outputs and LVCMOS, LVPECL, LVDS, CML, and HCSL receivers respectively.

NOTE

If 1.8-V LVCMOS signals from the high-speed clock outputs are desired to be interfaced with a 3.3-V LVCMOS receiver, a level-shifter like LSF0101 must be used to convert the 1.8-V LVCMOS signal to a 3.3-V LVCMOS signal.

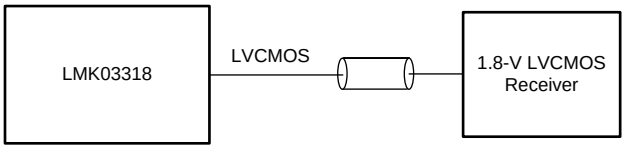

Figure 63. Interfacing LMK03318's 1.8-V LVCMOS Output With 1.8-V LVCMOS Receiver

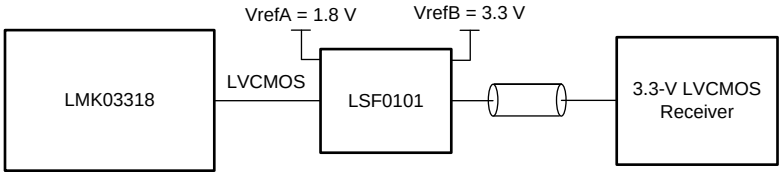

Figure 64. Interfacing LMK03318's 1.8-V LVCMOS Output With 3.3-V LVCMOS Receiver

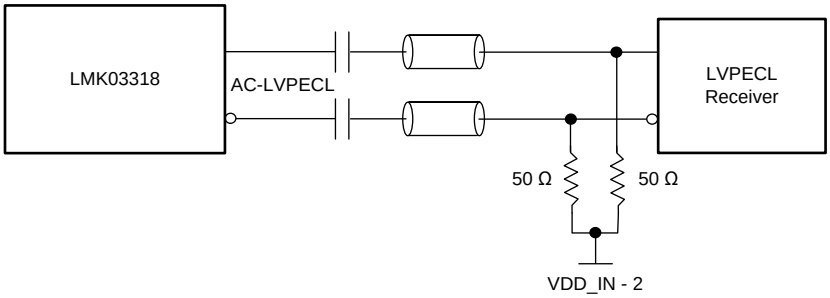

Figure 65. Interfacing LMK03318's AC-LVPECL Output With LVPECL Receiver

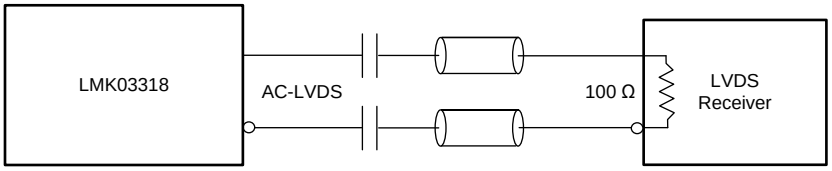

Figure 66. Interfacing LMK03318's AC-LVDS Output with LVDS Receiver

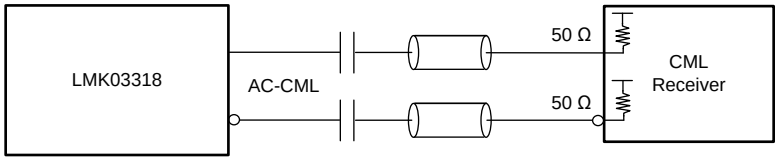

Figure 67. Interfacing LMK03318's AC-CML Output With CML Receiver

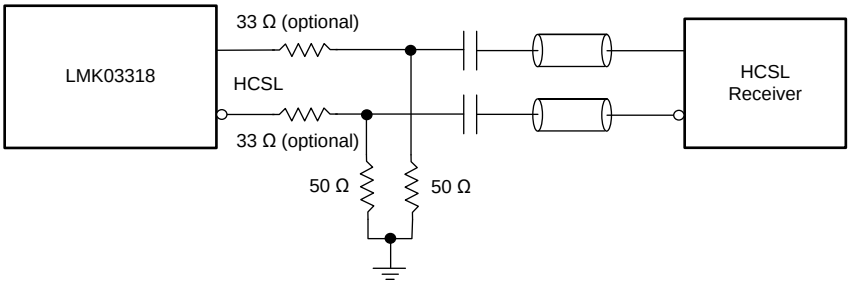

Figure 68. Interfacing LMK03318's Output With HCSL Receiver

Copyright © 2015–2016, Texas Instruments Incorporated

10.4.17 Output Synchronization

All output dividers and the PLL post divider can be synchronized using the active-low SYNCN signal. This signal can come from the GPIO0 pin (in soft pin mode only) or from R12.6. The most common way to execute the output synchronization is to toggle the GPIO0 pin. When R56.1 is set to 1, to enable synchronization of outputs that is derived from the PLL, and GPIO0 pin is asserted ($V_{GPIO0} \leq V_{IL}$), the corresponding output driver(s) are muted and divider is reset.

NOTE

Output-to-output skew specification can only be assured when PLL post divider is greater than 2 and after an output synchronization event.

The latency to reset VCO divider is a sum of

1. 2 to 3 negative edge of output clock cycles of the largest divided value + “x” nano seconds of asynchronous delay + 2 to 3 VCO clock cycle.
2. If SYNCN happens after rising but before negative edge, sync delay is less 3 clock cycle and closer to 2 clock cycle.
3. The latency is deterministic and its variation is no more than 1 VCO clock cycle and an example scenario is illustrated in Figure 62.

Table 7. Output Channel Synchronization

GPIO0 / R12.6	OUTPUT DIVIDER AND DRIVER STATE
0	Output driver(s) is tri-stated and divider is reset
1	Normal output driver/divider operation as configured

Minimum SYNCN pulse width = 3 negative clock edge of slowest output clock cycle + “x” nano second of prop delay + 3 VCO clock cycle. The synchronization feature is particularly helpful in systems with multiple LMK03318 devices. If SYNCN is released simultaneously for all devices, the total remaining output delay variation is ±1 VCO clock cycles for all devices configured to identical output mux settings. Output enable/disable events are synchronous to minimize glitch/runt pulses. In Soft Pin Mode, the SYNCN control can also be used to disable any outputs to prevent output clocks from being distributed to down-stream devices, such as DSPs or FPGAs, until they are configured and ready to accept the incoming clock.

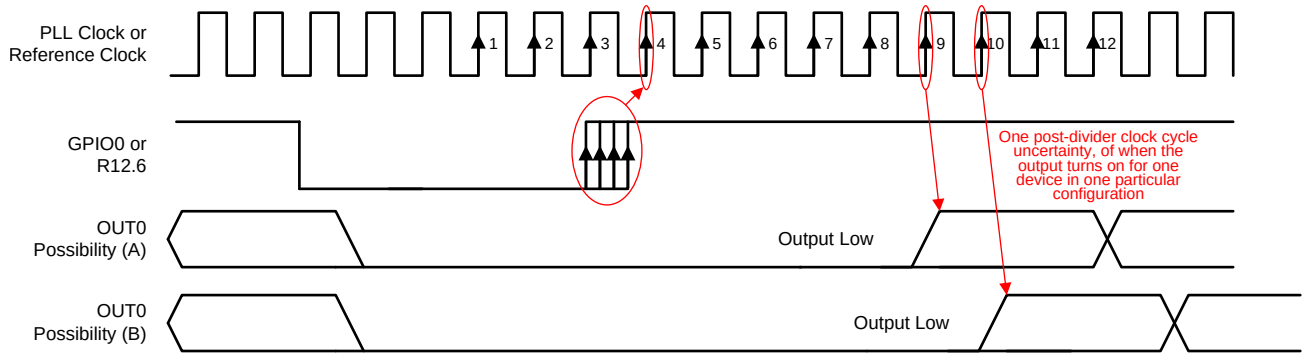

Figure 69. SYNCN to Output Delay Variation

10.4.18 Status Outputs

The device vitals such as input signal quality, smart MUX input selection, PLL loss of lock can be monitored by reading device registers or by monitoring the status pins, STATUS1 and STATUS0. R27 and R28 allow customizing which of the vitals are mapped out to these two pins. Table 7 lists the events that can be mapped to each status pin and which can also be read in the register space. The polarity of the events mapped to the status pins can be selected by programming R15.

A logic-high interrupt output (INTR) can also be selected on either status pins to indicate interrupt status from any of the device vitals listed in R16. In order to use this feature, R17.0 should be set to 1, R14[4:2] must be set to 0x7, and R14.0 must be set to 1. The interrupts listed in R16 can be combined in an AND or OR functionality by programming R17.1. If interrupts stemming from particular device vitals are to be ignored, the appropriate bits in R14 should be programmed as needed. The contents of R16 can be read back at any time irrespective of whether the INTR function is chosen in either status pins as long as R17.0 = 1 and the contents of R16 are self-cleared once the readback is complete. There also exists a “real-time” interrupt register, R13, which indicate interrupt status from the device vitals irrespective of the state of R17.0. The contents of R13 can be also read back at any time and are self-cleared once the readback is complete.

10.4.18.1 Loss of Reference

The primary and secondary references can be monitored for their input signal quality and appropriate register bits and status outputs, if enabled, are flagged if a *loss of signal* event is encountered. For differential inputs, a “loss of signal” event occurs when the differential input swing is lower than the threshold as programmed in R25[3-2] for secondary reference and in R25[1-0] for primary reference. For LVCMOS inputs, a *loss of signal* event can be triggered based on either a minimum threshold, programmed in R25[3-2] for secondary reference and in R25[1-0] for primary reference, or a minimum slew rate of 0.3 V/ns, rising edge or falling edge or both being monitored based on selections programmed in R25[7-6] for secondary reference and in R25[5-4] for primary reference.

10.4.18.2 Loss of Lock

The PLL’s loss of lock detection circuit is a digital circuit that detects any frequency error, even a single cycle slip. The PLL unlock is detected when a certain number of cycle slips have been exceeded, at which point the counter is reset. If the loss of lock is intended to toggle a system reset, an RC filter on the status output, which is programmed to indicate loss of lock, is recommended to avoid rare cycle slips from triggering an entire system reset.

Table 8. Device Vitals Selection Matrix for STATUS[1:0]

NUMBER	SIGNAL
0	PRIREF Loss of Signal (LOS)
1	SECREF Loss of Signal (LOS)
2	PLL Loss of Lock (LOL)
3	PLL R Divider, divided by 2 (when R Divider is not bypassed)
4	PLL N Divider, divided by 2
5	RESERVED
6	RESERVED
7	RESERVED
8	PLL VCO Calibration Active (CAL)
9	RESERVED
10	Interrupt (INTR)
11	PLL M Divider, divided by 2 (when M Divider is not bypassed)
12	RESERVED
13	EEPROM Active
14	PLL Secondary to Primary Switch in Automatic Mode
15	RESERVED

When the status pins are programmed as 3.3-V LVCMOS PLL clock outputs with fast output rise/fall time setting, they support up to 200 MHz operation and each output can independently be programmed to different frequencies. Each output has the option to be muted or not, in case the PLL from which it is derived loses lock, by programming R23 and when muted, the output is held at a static state depending on the programmed output type/polarity. in a loss-of-lock event. In order to reduce coupling onto the high-speed outputs, the output rise/fall time can be modified in R49 to support slower slew rates.

Copyright © 2015–2016, Texas Instruments Incorporated

NOTE

When either status pin is set as a 3.3-V LVCMOS output, there is fairly significant mixing of these output frequencies into the high-speed outputs, especially outputs 4, 5, 6, 7. If 3.3-V LVCMOS outputs are desired, proper care should be taken during frequency planning with the LMK03318 to ensure that the outputs, required with low jitter, are selected from either output 0, 1, 2, or 3. For best jitter performance, it is recommended to use both status pins to generate complementary 3.3-V LVCMOS outputs at any time.

10.5 Programming

The host (DSP, Microcontroller, FPGA, etc) configures and monitors the LMK03318 via the I^2C port. The host reads and writes to a collection of control/status bits called the register map. The device blocks can be controlled and monitored via a specific grouping of bits located within the register file. The host controls and monitors certain device-wide critical parameters directly via register control/status bits. In the absence of the host, the LMK03318 can be configured to operate in pin-mode either from its on-chip ROM or EEPROM depending on the state of HW_SW_CTRL pin. The EEPROM or ROM arrays are automatically copied to the device registers upon powerup. The user has the flexibility to re-write the contents of EEPROM from the SRAM up to a 100 times but the contents of ROM cannot be re-written.

Within the device registers, there are certain bits that have read/write access. Other bits are read-only (an attempt to write to a read only bit will not change the state of the bit). Certain device registers and bits are reserved meaning that they must not be changed from their default reset state. Figure 70 shows interface and control blocks within LMK03318 and the arrows refer to read access from and write access to the different embedded memories (ROM, EEPROM, SRAM).

Programming (continued)

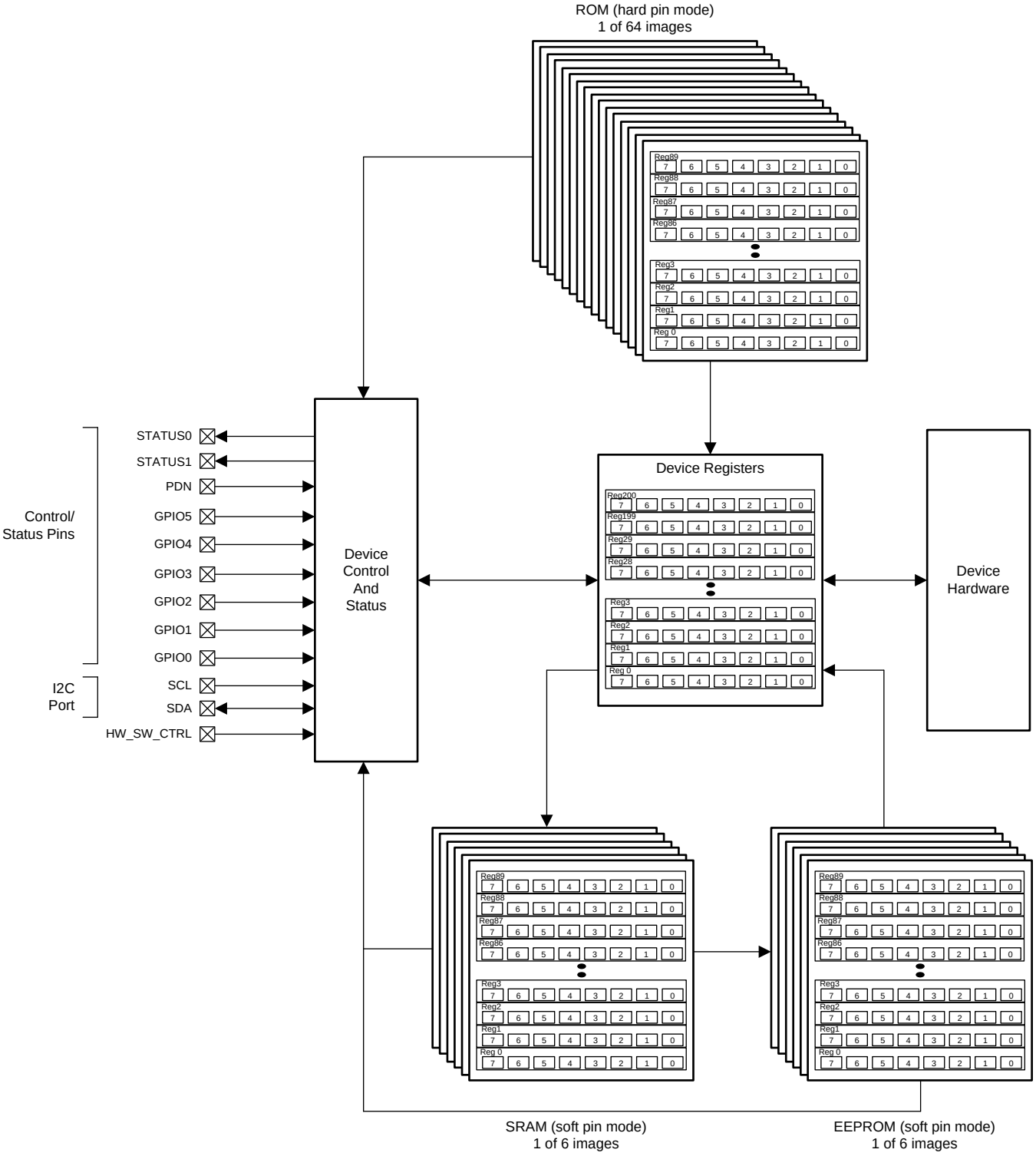

Figure 70. LMK03318 Interface and Control Block

Copyright © 2015–2016, Texas Instruments Incorporated

Programming (continued)

10.5.1 I²C Serial Interface

The I²C port on the LMK03318 works as a slave device and supports both the 100 kHz standard mode and 400 kHz fast-mode operations. Fast mode imposes a glitch tolerance requirement on the control signals. Therefore, the input receivers ignore pulses of less than 50-ns duration. The I²C timing is given in I²C-Compatible Interface Characteristics (SDA, SCL). The timing diagram is given in Figure 71.

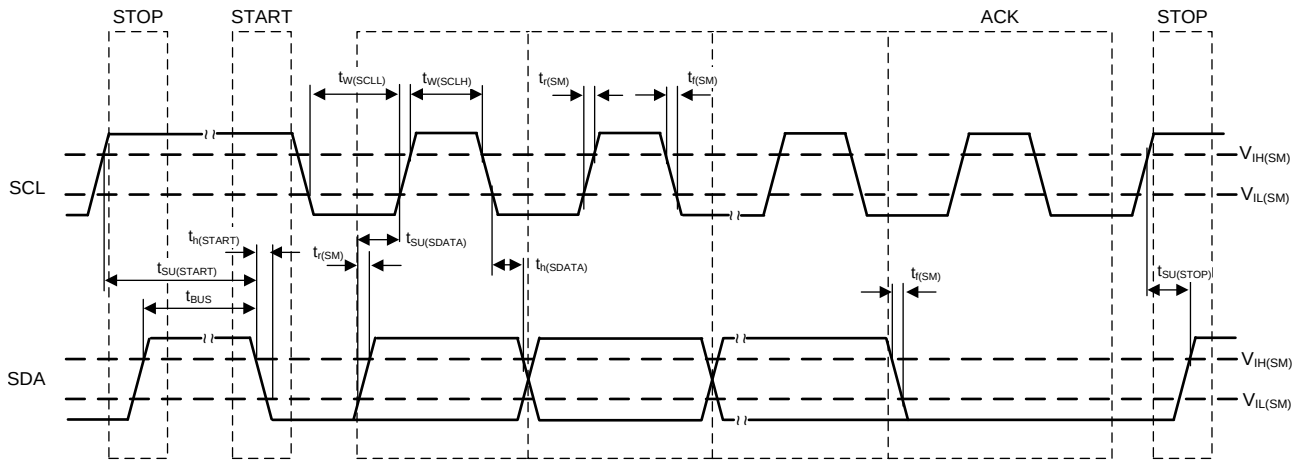

Figure 71. I²C Timing Diagram

In an I²C bus system, the LMK03318 acts as a slave device and is connected to the serial bus (data bus SDA and clock bus SCL). These are accessed via a 7-bit slave address transmitted as part of an I²C packet. Only the device with a matching slave address responds to subsequent I²C commands. In soft pin mode, the LMK03318 allows up to three unique slave devices to occupy the I²C bus based on the pin strapping of GPIO1 (tied to VDD_DIG, GND or V_{IM}). The device slave address is 10100xx (the two LSBs are determined by the GPIO1 pin).

NOTE

The PDN pin of LMK03318 should be high before any I²C communication on the bus. The first I²C transaction after power cycling LMK03318 should be ignored.

During the data transfer through the I²C interface, one clock pulse is generated for each data bit transferred. The data on the SDA line must be stable during the high period of the clock. The high or low state of the data line can change only when the clock signal on the SCL line is low. The start data transfer condition is characterized by a high-to-low transition on the SDA line while SCL is high. The stop data transfer condition is characterized by a low-to-high transition on the SDA line while SCL is high. The start and stop conditions are always initiated by the master. Every byte on the SDA line must be eight bits long. Each byte must be followed by an acknowledge bit and bytes are sent MSB first. The I²C register structure of the LMK03318 is shown in Figure 72.

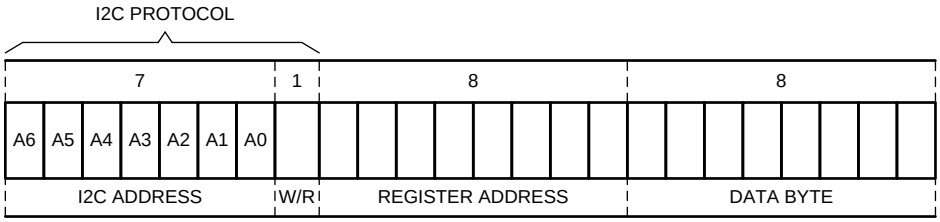

Figure 72. I²C Register Structure

The acknowledge bit (A) or non-acknowledge bit (A') is the 9th bit attached to any 8-bit data byte and is always generated by the receiver to inform the transmitter that the byte has been received (when A = 0) or not (when A' = 0). A = 0 is done by pulling the SDA line low during the 9th clock pulse and A' = 0 is done by leaving the SDA line high during the 9th clock pulse.

Programming (continued)

The I²C master initiates the data transfer by asserting a start condition which initiates a response from all slave devices connected to the serial bus. Based on the 8-bit address byte sent by the master over the SDA line (consisting of the 7-bit slave address (MSB first) and an R/W' bit), the device whose address corresponds to the transmitted address responds by sending an acknowledge bit. All other devices on the bus remain idle while the selected device waits for data transfer with the master.

After the data transfer has occurred, stop conditions are established. In write mode, the master asserts a stop condition to end data transfer during the 10th clock pulse following the acknowledge bit for the last data byte from the slave. In read mode, the master receives the last data byte from the slave but does not pull SDA low during the 9th clock pulse. This is known as a non-acknowledge bit. By receiving the non-acknowledge bit, the slave knows the data transfer is finished and enters the idle mode. The master then takes the data line low during the low period before the 10th clock pulse, and high during the 10th clock pulse to assert a stop condition. A generic transation is shown in Figure 73.

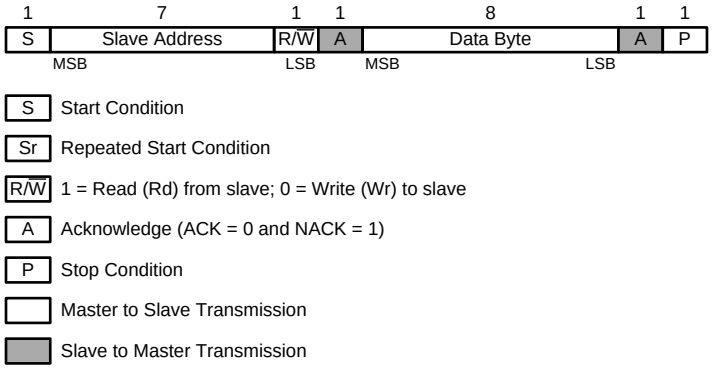

Figure 73. Generic Programming Sequence

The LMK03318 I²C interface supports "Block Register Write/Read", "Read/Write SRAM", and "Read/Write EEPROM" operations. For "Block Register Write/Read" operations, the I²C master can individually access addressed registers that are made of an 8-bit data byte. The offset of the indexed register is encoded in R10 and part of the EEPROM, as described in Table 9 below. To change the most significant 5 bits of the I²C slave address from its default value, the EEPROM byte 11 can be re-written with the desired value and R10 provides a read-back of the new slave address.

Table 9. I²C Slave Address

Operating Mode	R10.7	R10.6	R10.5	R10.4	R10.3	R10.2	R10.1
Hard pin	1	0	1	0	0	0	0
Soft pin	1	0	1	0	0	Controlled by GPIO1 state.	
						GPIO1	R10[2-1]
						0	0x0
						V_{IM}	0x1
						1	0x3

10.5.2 Block Register Write

The I²C *Block Register Write* transaction is illustrated in Figure 74 and consists of the following sequence:

1. Master issues a Start Condition.
2. Master writes the 7-bit Slave Address following by a Write bit.
3. Master writes the 8-bit Register address as the CommandCode of the programming sequence.
4. Master writes one or more data bytes each of which should be acknowledged by the slave. The slave increments the internal register address after each byte.
5. Master issues a Stop Condition to terminate the transaction.

Copyright © 2015–2016, Texas Instruments Incorporated

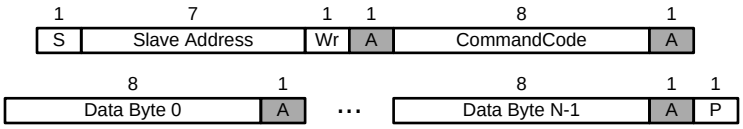

Figure 74. Block Register Write Programming Sequence

10.5.3 Block Register Read

The I^{2}C *Block Register Read* transaction is illustrated in Figure 75 and consists of the following sequence:

1. Master issues a Start Condition.
2. Master writes the 7-bit Slave Address followed by a Write bit.
3. Master writes the 8-bit Register address as the CommandCode of the programming sequence.
4. Master issues a Repeated Start Condition.
5. Master writes the 7-bit Slave Address following by a Read bit.
6. Slave returns one or more data bytes as long as the Master continues to acknowledge them. The slave increments the internal register address after each byte.
7. Master issues a Stop Condition to terminate the transaction.

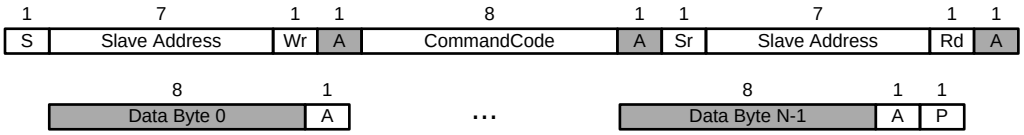

Figure 75. Block Register Read Programming Sequence

10.5.4 Write SRAM

The on-chip SRAM is a volatile, shadow memory array used to temporarily store register data, and is intended only for programming the non Volatile EEPROM array with one or more device start-up configuration settings (pages). The SRAM has the identical data format as the EEPROM map. The register configuration data can be transferred to the SRAM array through special memory access registers in the register map.

The SRAM is made up of a base memory array and 6 pages of identical memory arrays. In order to successfully program the SRAM, the complete base array and at least one page should be written.

The following details the programming sequence to transfer the device registers into the appropriate SRAM page.

1. Program the device registers to match a desired setting.
2. Write R145[3:0] with a valid SRAM page (0 to 5) to commit the current register data.
3. Write a 1 to R137.6. This ensures that the device registers are copied to the desired SRAM page.
4. If another device setting is desired to be written to a different SRAM page, repeat steps 1-3 and select an unused SRAM page.

The SRAM can also be written with particular values according to the following programming sequence.

1. Write the most significant 8th bit of the SRAM address in R139.0 and write the least significant 8 bits in R140.
2. Write the desired data byte in R142 in the same I^{2}C transaction and this data byte will be written to the address specified in the step above. Any additional access that is part of the same transaction will cause the SRAM address to be incremented and a write will take place to the next SRAM address. Access to SRAM will terminate at the end of current I^{2}C transaction.
3. Steps 1 and 2 need to be followed to change EEPROM bytes 11 and 12. Byte 11 denotes the I^{2}C slave address of LMK03318 and Byte 12 denotes an 8-b user space that can be utilized as a device identifier among multiple LMK03318 instances with different EEPROM images.

NOTE

It is possible to increment SRAM address incorrectly when 2 successive accesses are made to R140.

10.5.5 Write EEPROM

The on-chip EEPROM is a non-volatile memory array used to permanently store register data for one or more device start-up configuration settings (pages), which can be selected to initialize registers upon power-up or POR. There are a total of 6 independent EEPROM pages of which each page is selected by the 3-level GPIO[3:2] pins, and each page is comprised of bits shown in the EEPROM Map. The transfer must first happen to the corresponding SRAM page and then to the EEPROM page. During "EEPROM write", R137.2 is a 1 and the EEPROM contents cannot be accessed. The following details the programming sequence to transfer the entire contents of SRAM to EEPROM:

1. Make sure the *Write SRAM* procedure (Write SRAM) was done to commit the register settings to the SRAM page(s) with start-up configurations intended for programming to the EEPROM array.
2. Write 0xEA to R144. This provides basic protection from inadvertent programming of EEPROM.
3. Write a 1 to R137.0. This programs the entire SRAM contents to EEPROM. Once completed, the contents in R136 will increment by 1. R136 contains the total number of EEPROM programming cycles that are successfully completed.
4. Write 0x00 to R144 to protect against inadvertent programming of EEPROM.
5. If an EEPROM write is unsuccessful, a readback of R137.5 results in a 1. In this case, the device will not function correctly and will be locked up. To unlock the device for correct operation, a new EEPROM write sequence should be initiated and successfully completed.

10.5.6 Read SRAM

The contents of the SRAM can be read out, one word at a time, starting with that of the requested address. Following details the programming sequence for an SRAM read by address.

1. Write the most significant 9th bit of the SRAM address in R139.0 and write the least significant 8 bits of the SRAM address in R140.
2. The SRAM data located at the address specified in the step above can be obtained by reading R142 in the same I^2C transaction. Any additional access that is part of the same transaction will cause the SRAM address to be incremented and a read will take place of the next SRAM address. Access to SRAM will terminate at the end of current I^2C transaction.

NOTE

It is possible to increment SRAM address incorrectly when 2 successive accesses are made to R140.

10.5.7 Read EEPROM

The contents of the EEPROM can be read out, one word at a time, starting with that of the requested address. Following details the programming sequence for an EEPROM read by address.

1. Write the most significant 9th bit of the EEPROM address in R139.0 and write the least significant 8 bits of the EEPROM address in R140.
2. The EEPROM data located at the address specified in the step above can be obtained by reading R141 in the same I^2C transaction. Any additional access that is part of the same transaction will cause the EEPROM address to be incremented and a read will take place of the next EEPROM address. Access to EEPROM will terminate at the end of current I^2C transaction.

NOTE

It is possible to increment EEPROM address incorrectly when 2 successive accesses are made to R140.

Copyright © 2015–2016, Texas Instruments Incorporated

10.5.8 Read ROM

The contents of the ROM can be read out, one word at a time, starting with that of the requested address. Following details the programming sequence of a ROM read by address.

1. Write the most significant 11th, 10th, 9th, and 8th bit of the ROM address in R139[3-0] and write the least significant 8 bits of the ROM address in R140.
2. The ROM data located at the address specified in the step above can be obtained by reading R143 in the same I^2C transaction. Any additional access that is part of the same transaction will cause the ROM address to be incremented and a read will take place of the next ROM address. Access to ROM will terminate at the end of current I^2C transaction.

10.5.9 Default Device Configurations in EEPROM and ROM

Tables 10-13 show the device default configurations stored in the on-chip EEPROM. Tables 14-18 show the device default configurations stored in the on-chip ROM.

Table 10. Default EEPROM Contents (HW_SW_CTRL = 0) – Input and Status Configuration

GPIO[3:2]	PRI INPUT (MHz)	PRI TYPE	PRI DOUBLER	SEC INPUT (MHz)	SEC TYPE	XO INT LOAD (pF)	SEC DOUBLER	STATUS1 MUX	STATUS0 MUX	PREDIV	DIV	STATUS1 / STATUS0 FREQ (MHz)	STATUS1 / STATUS0 RISE / FALL TIME (ns)
V_{IM}, V_{IM}	25	LVDS	Enabled	25	XTAL	9	Enabled	LOL	Disable	n/a	n/a	n/a	n/a
00	156.25	LVPECL	Disabled	156.25	LVCMOS	n/a	Disabled	LOL	LOR_ PRI	n/a	n/a	n/a	n/a
0, V_{IM}	50	LVCMOS	Enabled	50	XTAL	9	Enabled	PLL	PLL	4	50	25	2.1
01	50	LVCMOS	Enabled	50	XTAL	9	Enabled	PLL	PLL	4	50	25	2.1
10	25	LVCMOS	Enabled	25	LVPECL	n/a	Enabled	(LOR_PRI)'	(LOL)'	n/a	n/a	n/a	n/a
1, V_{IM}	25	LVCMOS	Enabled	25	XTAL	9	Enabled	(LOR_PRI)'	(LOL)'	n/a	n/a	n/a	n/a
11	25	LVCMOS	Enabled	25	XTAL	9	Enabled	(LOR_PRI)'	(LOL)'	n/a	n/a	n/a	n/a

Copyright © 2015–2016, Texas Instruments Incorporated

Table 11. Default EEPROM Contents (HW_SW_CTRL = 0) – PLL Configuration(1)

GPIO[3:2]	PLL INPUT MUX	PLL INPUT (MHz)	PLL TYPE	PLL R DIV	PLL M DIV	PLL N DIV	PLL N DIV INT	PLL N DIV NUM	PLL N DIV DEN	PLL FRAC ORDER	PLL FRAC DITHER	PLL VCO (MHz)	PLL P DIV
V_{IM}, V_{IM}	REFSEL	50	Clock Gen Integer	1	1	102	102	0	1	n/a	Disabled	5100	8
00	REFSEL	156.25	Clock Gen Integer	1	2	66	66	0	1	n/a	Disabled	5156.25	4
0, V_{IM}	REFSEL	100	Clock Gen Integer	1	1	50	50	0	1	n/a	Disabled	5000	4
01	REFSEL	100	Clock Gen Integer	1	1	50	50	0	1	n/a	Disabled	5000	4
10	REFSEL	50	Clock Gen Integer	1	1	100	100	0	1	n/a	Disabled	5000	4
1, V_{IM}	REFSEL	50	Clock Gen Integer	1	1	100	100	0	1	n/a	Disabled	5000	4
11	REFSEL	50	Clock Gen Integer	1	1	102	102	0	1	n/a	Disabled	5100	3

(1) When PLL is set as an integer-based clock generator, external loop filter component, C2, should be 3.3 nF and loop bandwidth is around 400 kHz. When PLL is set as a fractional-based clock generator, external loop filter component, C2, should be 33 nF and loop bandwidth is around 400 kHz.

Copyright © 2015–2016, Texas Instruments Incorporated

Table 12. Default EEPROM Contents (HW_SW_CTRL = 0) – Outputs [0-3] Configuration

GPIO[3:2]	OUT0-1 DIVIDER	OUT0-1 FREQ (MHz)	OUT0 TYPE	OUT1 TYPE	OUT2-3 DIVIDER	OUT2-3 FREQ (MHz)	OUT2 TYPE	OUT3 TYPE
V_{IM}, V_{IM}	n/a	n/a	Disable	Disable	n/a	n/a	Disable	Disable
00	8	161.1328125	LVPECL	LVPECL	8	161.1328125	LVPECL	LVPECL
0, V_{IM}	8	156.25	LVPECL	LVPECL	8	156.25	LVPECL	LVPECL
01	8	156.25	LVPECL	LVPECL	10	125	LVPECL	LVPECL
10	8	156.25	LVPECL	LVPECL	8	156.25	LVPECL	LVPECL
1, V_{IM}	8	156.25	LVPECL	LVPECL	8	156.25	LVPECL	LVPECL
11	17	100	HCSL	HCSL	17	100	HCSL	HCSL

Copyright © 2015–2016, Texas Instruments Incorporated

Table 13. Default EEPROM Contents (HW_SW_CTRL = 0) – Outputs [4-7] Configuration

GPIO [3:2]	OUT4 DIV	OUT4 FREQ (MHz)	OUT4 MUX SELECT	OUT4 TYPE	OUT5 DIV	OUT5 FREQ (MHz)	OUT5 MUX SELECT	OUT5 TYPE	OUT6 DIV	OUT6 FREQ (MHz)	OUT6 MUX SELECT	OUT6 TYPE	OUT7 DIV	OUT7 FREQ (MHz)	OUT7 MUX SELECT	OUT7 TYPE
V_{IM}, V_{IM}	3	212.5	PLL	LVPECL	3	212.5	PLL	LVPECL	6	106.25	PLL	LVPECL	6	106.25	PLL	LVPECL
00	8	161.1328125	PLL	LVPECL	8	161.1328125	PLL	LVPECL	8	161.1328125	PLL	LVPECL	8	161.1328125	PLL	LVPECL
0, V_{IM}	8	156.25	PLL	LVPECL	10	125	PLL	LVPECL	10	125	PLL	LVPECL	10	125	PLL	LVPECL
01	10	125	PLL	LVPECL	10	125	PLL	LVPECL	10	125	PLL	LVPEC	10	125	PLL	LVPECL
10	50	25	PLL	LVPECL	50	25	PLL	LVPECL	50	25	PLL	LVPECL	50	25	PLL	LVPECL
1, V_{IM}	8	156.25	PLL	LVPECL	50	25	PLL	LVPECL	50	25	PLL	LVPECL	1	25	SEC	LVDS
11	17	100	PLL	LVDS	n/a	n/a	n/a	Disable	n/a	n/a	n/a	Disable	17	100	PLL	LVCMOS

Copyright © 2015–2016, Texas Instruments Incorporated

Table 14. Default ROM Contents (HW_SW_CTRL = 1) - Input Configuration

GPIO[5:0] (decimal)	PRI INPUT (MHz)	PRI TYPE	PRI DOUBLER	SEC INPUT (MHz)	SEC TYPE	XO INT LOAD (pF)	SEC DOUBLER
0	50	LVCMOS	Enabled	50	XTAL	9	Enabled
1	50	LVCMOS	Enabled	50	XTAL	9	Enabled
2	50	LVCMOS	Enabled	50	XTAL	9	Enabled
3	50	LVCMOS	Enabled	50	XTAL	9	Enabled
4	50	LVCMOS	Enabled	50	XTAL	9	Enabled
5	50	LVCMOS	Enabled	50	XTAL	9	Enabled
6	30.72	LVCMOS	Disabled	30.72	XTAL	9	Disabled
7	19.2	LVCMOS	Disabled	19.2	XTAL	9	Disabled
8	10	LVCMOS	Disabled	10	XTAL	9	Disabled
9	25	LVCMOS	Enabled	25	XTAL	9	Enabled
10	50	LVCMOS	Enabled	50	XTAL	9	Enabled
11	25	LVCMOS	Enabled	25	XTAL	9	Enabled
12	50	LVCMOS	Enabled	50	XTAL	9	Enabled
13	25	LVCMOS	Enabled	25	XTAL	9	Enabled
14	50	LVCMOS	Enabled	50	XTAL	9	Enabled
15	25	LVCMOS	Enabled	25	XTAL	9	Enabled
16	50	LVCMOS	Enabled	50	XTAL	9	Enabled
17	25	LVCMOS	Enabled	25	XTAL	9	Enabled
18	50	LVCMOS	Enabled	50	XTAL	9	Enabled
19	25	LVCMOS	Enabled	25	XTAL	9	Enabled
20	50	LVCMOS	Enabled	50	XTAL	9	Enabled
21	19.44	LVCMOS	Disabled	19.44	XTAL	9	Disabled
22	38.88	LVCMOS	Disabled	38.88	XTAL	9	Disabled
23	25	LVCMOS	Enabled	25	XTAL	9	Enabled
24	50	LVCMOS	Enabled	50	XTAL	9	Enabled
25	19.44	LVCMOS	Disabled	19.44	XTAL	9	Disabled
26	38.88	LVCMOS	Disabled	38.88	XTAL	9	Disabled
27	25	LVCMOS	Enabled	25	XTAL	n/a	Enabled
28	25	LVCMOS	Enabled	25	XTAL	n/a	Enabled
29	25	LVCMOS	Enabled	25	XTAL	9	Enabled
30	50	LVCMOS	Enabled	50	XTAL	9	Enabled
31	25	LVCMOS	Enabled	25	XTAL	n/a	Enabled
32	25	LVCMOS	Enabled	25	LVCMOS	n/a	Enabled
33	25	LVCMOS	Enabled	25	XTAL	9	Enabled

Copyright © 2015–2016, Texas Instruments Incorporated

Table 14. Default ROM Contents (HW_SW_CTRL = 1) - Input Configuration (continued)

GPIO[5:0] (decimal)	PRI INPUT (MHz)	PRI TYPE	PRI DOUBLER	SEC INPUT (MHz)	SEC TYPE	XO INT LOAD (pF)	SEC DOUBLER
34	50	LVCMOS	Enabled	50	XTAL	9	Enabled
35	19.44	LVCMOS	Disabled	19.44	XTAL	9	Disabled
36	38.88	LVCMOS	Disabled	38.88	XTAL	9	Disabled
37	25	LVCMOS	Enabled	25	XTAL	9	Enabled
38	50	LVCMOS	Enabled	50	XTAL	9	Enabled
39	19.44	LVCMOS	Disabled	19.44	XTAL	9	Disabled
40	38.88	LVCMOS	Disabled	38.88	XTAL	9	Disabled
41	19.44	LVCMOS	Disabled	19.44	XTAL	9	Disabled
42	38.88	LVCMOS	Disabled	38.88	XTAL	9	Disabled
43	19.44	LVCMOS	Disabled	19.44	XTAL	9	Disabled
44	38.88	LVCMOS	Disabled	38.88	XTAL	9	Disabled
45	25	LVCMOS	Enabled	25	XTAL	9	Enabled
46	50	LVCMOS	Enabled	50	XTAL	9	Enabled
47	25	LVCMOS	Enabled	25	XTAL	9	Enabled
48	50	LVCMOS	Enabled	50	XTAL	9	Enabled
49	25	LVCMOS	Enabled	25	XTAL	9	Enabled
50	50	LVCMOS	Enabled	50	XTAL	9	Enabled
51	25	LVCMOS	Enabled	25	XTAL	9	Enabled
52	50	LVCMOS	Enabled	50	XTAL	9	Enabled
53	25	LVCMOS	Enabled	25	XTAL	9	Enabled
54	50	LVCMOS	Enabled	50	XTAL	9	Enabled
55	19.44	LVCMOS	Disabled	19.44	XTAL	9	Disabled
56	38.88	LVCMOS	Disabled	38.88	XTAL	9	Disabled
57	25	LVCMOS	Enabled	25	XTAL	9	Enabled
58	25	LVCMOS	Enabled	25	XTAL	9	Enabled
59	25	LVCMOS	Enabled	25	XTAL	9	Enabled
60	50	LVCMOS	Enabled	50	XTAL	9	Enabled
61	25	LVCMOS	Enabled	25	XTAL	9	Enabled
62	50	LVCMOS	Enabled	50	XTAL	9	Enabled
63	25	LVCMOS	Enabled	25	XTAL	9	Enabled

Copyright © 2015–2016, Texas Instruments Incorporated

Table 15. Default ROM Contents (HW_SW_CTRL = 1) - Status Configuration

GPIO[5:0] (decimal)	STATUS1 MUX	STATUS0 MUX	STATUS1 PREDIV	STATUS1 DIV	STATUS1 FREQ (MHz)	STATUS1 RISE/FALL TIME (ns)	STATUS0 PREDIV	STATUS0 DIV	STATUS0 FREQ (MHz)	STATUS0 RISE/FALL TIME (ns)
0	LOL	PLL	n/a	n/a	n/a	n/a	5	20	50	2.1
1	LOL	PLL	n/a	n/a	n/a	n/a	5	40	25	2.1
2	LOL	LOR_PRI	n/a	n/a	n/a	n/a	n/a	n/a	n/a	n/a
3	LOR_PRI	LOL	n/a	n/a	n/a	n/a	n/a	n/a	n/a	n/a
4	LOL	LOR_PRI	n/a	n/a	n/a	n/a	n/a	n/a	n/a	n/a
5	PLL	PLL	5	40	25	2.1	5	40	25	2.1
6	LOR_PRI	LOL	n/a	n/a	n/a	n/a	n/a	n/a	n/a	n/a
7	LOR_PRI	LOL	n/a	n/a	n/a	n/a	n/a	n/a	n/a	n/a
8	LOR_PRI	LOL	n/a	n/a	n/a	n/a	n/a	n/a	n/a	n/a
9	PLL	LOL	4	51	25	2.1	n/a	n/a	n/a	n/a
10	PLL	LOL	4	51	25	2.1	n/a	n/a	n/a	n/a
11	PLL	LOL	5	30	33.3333	2.1	n/a	n/a	n/a	n/a
12	PLL	LOL	5	30	33.3333	2.1	n/a	n/a	n/a	n/a
13	PLL	LOL	4	51	25	2.1	n/a	n/a	n/a	n/a
14	PLL	LOL	4	51	25	2.1	n/a	n/a	n/a	n/a
15	PLL	LOL	4	51	25	2.1	n/a	n/a	n/a	n/a
16	PLL	LOL	4	51	25	2.1	n/a	n/a	n/a	n/a
17	LOR_PRI	LOL	n/a	n/a	n/a	n/a	n/a	n/a	n/a	n/a
18	LOR_PRI	LOL	n/a	n/a	n/a	n/a	n/a	n/a	n/a	n/a
19	PLL	LOL	5	40	25	2.1	n/a	n/a	n/a	n/a
20	PLL	LOL	5	40	25	2.1	n/a	n/a	n/a	n/a
21	PLL	LOL	5	40	25	2.1	n/a	n/a	n/a	n/a
22	PLL	LOL	5	40	25	2.1	n/a	n/a	n/a	n/a
23	LOR_PRI	LOL	n/a	n/a	n/a	n/a	n/a	n/a	n/a	n/a
24	LOR_PRI	LOL	n/a	n/a	n/a	n/a	n/a	n/a	n/a	n/a
25	LOR_PRI	LOL	n/a	n/a	n/a	n/a	n/a	n/a	n/a	n/a
26	LOR_PRI	LOL	n/a	n/a	n/a	n/a	n/a	n/a	n/a	n/a
27	LOR_PRI	LOL	n/a	n/a	n/a	n/a	n/a	n/a	n/a	n/a
28	LOR_PRI	LOL	n/a	n/a	n/a	n/a	n/a	n/a	n/a	n/a
29	LOR_PRI	LOL	n/a	n/a	n/a	n/a	n/a	n/a	n/a	n/a
30	LOR_PRI	LOL	n/a	n/a	n/a	n/a	n/a	n/a	n/a	n/a
31	LOR_PRI	LOL	n/a	n/a	n/a	n/a	n/a	n/a	n/a	n/a

Copyright © 2015–2016, Texas Instruments Incorporated

Table 15. Default ROM Contents (HW_SW_CTRL = 1) - Status Configuration (continued)

GPIO[5:0] (decimal)	STATUS1 MUX	STATUS0 MUX	STATUS1 PREDIV	STATUS1 DIV	STATUS1 FREQ (MHz)	STATUS1 RISE/FALL TIME (ns)	STATUS0 PREDIV	STATUS0 DIV	STATUS0 FREQ (MHz)	STATUS0 RISE/FALL TIME (ns)
32	LOR_PRI	LOL	n/a	n/a	n/a	n/a	n/a	n/a	n/a	n/a
33	PLL	LOL	5	15	66.6666	2.1	n/a	n/a	n/a	n/a
34	PLL	LOL	5	15	66.6666	2.1	n/a	n/a	n/a	n/a
35	PLL	LOL	5	15	66.6666	2.1	n/a	n/a	n/a	n/a
36	PLL	LOL	5	15	66.6666	2.1	n/a	n/a	n/a	n/a
37	LOR_PRI	LOL	n/a	n/a	n/a	n/a	n/a	n/a	n/a	n/a
38	LOR_PRI	LOL	n/a	n/a	n/a	n/a	n/a	n/a	n/a	n/a
39	LOR_PRI	LOL	n/a	n/a	n/a	n/a	n/a	n/a	n/a	n/a
40	LOR_PRI	LOL	n/a	n/a	n/a	n/a	n/a	n/a	n/a	n/a
41	PLL	LOL	4	32	38.88	2.1	n/a	n/a	n/a	n/a
42	PLL	LOL	4	32	38.88	2.1	n/a	n/a	n/a	n/a
43	PLL	LOL	4	32	38.88	2.1	n/a	n/a	n/a	n/a
44	PLL	LOL	4	32	38.88	2.1	n/a	n/a	n/a	n/a
45	LOR_PRI	LOL	n/a	n/a	n/a	n/a	n/a	n/a	n/a	n/a
46	LOR_PRI	LOL	n/a	n/a	n/a	n/a	n/a	n/a	n/a	n/a
47	LOR_PRI	LOL	n/a	n/a	n/a	n/a	n/a	n/a	n/a	n/a
48	LOR_PRI	LOL	n/a	n/a	n/a	n/a	n/a	n/a	n/a	n/a
49	LOR_PRI	LOL	n/a	n/a	n/a	n/a	n/a	n/a	n/a	n/a
50	LOR_PRI	LOL	n/a	n/a	n/a	n/a	n/a	n/a	n/a	n/a
51	LOR_PRI	LOL	n/a	n/a	n/a	n/a	n/a	n/a	n/a	n/a
52	LOR_PRI	LOL	n/a	n/a	n/a	n/a	n/a	n/a	n/a	n/a
53	LOR_PRI	LOL	n/a	n/a	n/a	n/a	n/a	n/a	n/a	n/a
54	LOR_PRI	LOL	n/a	n/a	n/a	n/a	n/a	n/a	n/a	n/a
55	LOR_PRI	LOL	n/a	n/a	n/a	n/a	n/a	n/a	n/a	n/a
56	LOR_PRI	LOL	n/a	n/a	n/a	n/a	n/a	n/a	n/a	n/a
57	LOR_PRI	LOL	n/a	n/a	n/a	n/a	n/a	n/a	n/a	n/a
58	LOR_PRI	LOL	n/a	n/a	n/a	n/a	n/a	n/a	n/a	n/a
59	LOR_PRI	LOL	n/a	n/a	n/a	n/a	n/a	n/a	n/a	n/a
60	LOR_PRI	LOL	n/a	n/a	n/a	n/a	n/a	n/a	n/a	n/a
61	LOR_PRI	LOL	n/a	n/a	n/a	n/a	n/a	n/a	n/a	n/a
62	LOR_PRI	LOL	n/a	n/a	n/a	n/a	n/a	n/a	n/a	n/a
63	LOR_PRI	LOL	n/a	n/a	n/a	n/a	n/a	n/a	n/a	n/a

Copyright © 2015–2016, Texas Instruments Incorporated

Table 16. Default ROM Contents (HW_SW_CTRL = 1) – PLL Configuration[(1)]

GPIO[5:0] (decimal)	PLL IN MUX	PLL IN (MHz)	PLL TYPE	PLL R DIV	PLL M DIV	PLL N DIV	PLL N DIV INT	PLL N DIV NUM	PLL N DIV DEN	PLL FRAC ORDER	PLL FRAC DITHER	PLL VCO (MHz)	PLL P DIV
0	REFSEL	50	Clock Gen Integer	1	1	50	50	0	1	n/a	Disabled	5000	5
1	REFSEL	50	Clock Gen Integer	1	1	50	50	0	1	n/a	Disabled	5000	5
2	REFSEL	50	Clock Gen Integer	1	1	50	50	0	1	n/a	Disabled	5000	5
3	REFSEL	50	Clock Gen Integer	1	1	50	50	0	1	n/a	Disabled	5000	4
4	REFSEL	50	Clock Gen Integer	1	1	50	50	0	1	n/a	Disabled	5000	2
5	REFSEL	50	Clock Gen Integer	1	1	50	50	0	1	n/a	Disabled	5000	2
6	REFSEL	30.72	Jitter Cleaner Integer	1	24	3840	3840	0	1	n/a	Disabled	4915.2	4
7	REFSEL	19.2	Clock Gen Integer	1	1	256	256	0	1	n/a	Disabled	4915.2	4
8	REFSEL	10	Clock Gen Integer	1	1	491.52	491	1300000	2500000	Third	Enabled	4915.2	4
9	REFSEL	25	Clock Gen Fractional	1	1	102	102	0	1	n/a	Disabled	5100	8
10	REFSEL	50	Clock Gen Integer	1	1	51	51	0	1	n/a	Disabled	5100	8
11	REFSEL	25	Clock Gen Fractional	1	1	100	100	0	1	n/a	Disabled	5000	2
12	REFSEL	50	Clock Gen Integer	1	1	50	50	0	1	n/a	Disabled	5000	2
13	REFSEL	25	Clock Gen Integer	1	1	102	102	0	1	n/a	Disabled	5100	3
14	REFSEL	50	Clock Gen Integer	1	1	51	51	0	1	n/a	Disabled	5100	3
15	REFSEL	25	Clock Gen Integer	1	1	102	102	0	1	n/a	Disabled	5100	3
16	REFSEL	50	Clock Gen Integer	1	1	51	51	0	1	n/a	Disabled	5100	3
17	REFSEL	25	Clock Gen Integer	1	1	100	100	0	1	n/a	Disabled	5000	8
18	REFSEL	50	Clock Gen Integer	1	1	50	50	0	1	n/a	Disabled	5000	8
19	REFSEL	25	Clock Gen Integer	1	1	100	100	0	1	n/a	Disabled	5000	8
20	REFSEL	50	Clock Gen Integer	1	1	50	50	0	1	n/a	Disabled	5000	8
21	REFSEL	19.44	Clock Gen Integer	1	1	257.2016461	257	157536	781250	Third	Enabled	5000	8
22	REFSEL	38.88	Clock Gen Integer	1	1	128.600823	128	469393	781250	Third	Enabled	5000	8
23	REFSEL	25	Clock Gen Integer	1	1	100	100	0	1	n/a	Disabled	5000	2
24	REFSEL	50	Clock Gen Integer	1	1	50	50	0	1	n/a	Disabled	5000	2
25	REFSEL	19.44	Clock Gen Integer	1	1	257.2016461	257	157536	781250	Third	Enabled	5000	2
26	REFSEL	38.88	Clock Gen Integer	1	1	128.600823	128	469393	781250	Third	Enabled	5000	2
27	REFSEL	25	Clock Gen Integer	1	1	100	100	0	1	n/a	Disabled	5000	2
28	REFSEL	25	Clock Gen Integer	1	1	100	100	0	1	n/a	Disabled	5000	8
29	REFSEL	25	Clock Gen Integer	1	1	100	100	0	1	n/a	Disabled	5000	8
30	REFSEL	50	Clock Gen Integer	1	1	50	50	0	1	n/a	Disabled	5000	2

(1) When PLL is set as an integer-based clock generator, external loop filter component, C2, should be 3.3nF and loop bandwidth is around 400kHz. When PLL is set as a fractional-based clock generator, external loop filter component, C2, should be 33nF and loop bandwidth is around 400kHz.

Copyright © 2015–2016, Texas Instruments Incorporated

Table 16. Default ROM Contents (HW_SW_CTRL = 1) – PLL Configuration[1] (continued)

GPIO[5:0] (decimal)	PLL IN MUX	PLL IN (MHz)	PLL TYPE	PLL R DIV	PLL M DIV	PLL N DIV	PLL N DIV INT	PLL N DIV NUM	PLL N DIV DEN	PLL FRAC ORDER	PLL FRAC DITHER	PLL VCO (MHz)	PLL P DIV
31	REFSEL	25	Clock Gen Integer	1	1	100	100	0	1	n/a	Disabled	5000	2
32	REFSEL	25	Clock Gen Integer	1	1	100	100	0	1	n/a	Disabled	5000	2
33	REFSEL	25	Clock Gen Integer	1	1	100	100	0	1	n/a	Disabled	5000	8
34	REFSEL	50	Clock Gen Integer	1	1	50	50	0	1	n/a	Disabled	5000	8
35	REFSEL	19.44	Clock Gen Integer	1	1	257.2016461	257	157536	781250	Third	Enabled	5000	8
36	REFSEL	38.88	Clock Gen Fractional	1	1	128.600823	128	469393	781250	Third	Enabled	5000	8
37	REFSEL	25	Clock Gen Fractional	1	1	100	100	0	1	n/a	Disabled	5000	8
38	REFSEL	50	Clock Gen Integer	1	1	50	50	0	1	n/a	Disabled	5000	8
39	REFSEL	19.44	Clock Gen Integer	1	1	257.2016461	257	157536	781250	Third	Enabled	5000	8
40	REFSEL	38.88	Clock Gen Fractional	1	1	128.600823	128	469393	781250	Third	Enabled	5000	8
41	REFSEL	19.44	Clock Gen Integer	1	1	256	256	0	1	n/a	Disabled	4976.64	8
42	REFSEL	38.88	Clock Gen Fractional	1	1	128	128	0	1	n/a	Disabled	4976.64	8
43	REFSEL	19.44	Clock Gen Integer	1	1	256	256	0	1	n/a	Disabled	4976.64	8
44	REFSEL	38.88	Clock Gen Fractional	1	1	128	128	0	1	n/a	Disabled	4976.64	8
45	REFSEL	25	Clock Gen Fractional	1	1	100	100	0	1	n/a	Disabled	5000	5
46	REFSEL	50	Clock Gen Fractional	1	1	50	50	0	1	n/a	Disabled	5000	5
47	REFSEL	25	Clock Gen Integer	1	1	100	100	0	1	n/a	Disabled	5000	8
48	REFSEL	50	Clock Gen Fractional	1	1	50	50	0	1	n/a	Disabled	5000	8
49	REFSEL	25	Clock Gen Integer	1	1	100	100	0	1	n/a	Disabled	5000	8
50	REFSEL	50	Clock Gen Integer	1	1	50	50	0	1	n/a	Disabled	5000	8
51	REFSEL	25	Clock Gen Fractional	1	1	106.25	106	1000000	4000000	First	Enabled	5312.5	2
52	REFSEL	50	Clock Gen Fractional	1	1	53.125	53	500000	4000000	First	Enabled	5312.5	2
53	REFSEL	25	Clock Gen Integer	1	1	103.125	103	500000	4000000	First	Enabled	5156.25	8
54	REFSEL	50	Clock Gen Fractional	1	1	51.5625	51	2250000	4000000	First	Enabled	5156.25	8
55	REFSEL	19.44	Clock Gen Fractional	1	1	265.2391976	265	597994	2500000	Third	Enabled	5156.25	8
56	REFSEL	38.88	Clock Gen Integer	1	1	132.6195988	132	1548997	2500000	Third	Enabled	5156.25	8
57	REFSEL	25	Clock Gen Integer	1	1	100	100	0	1	n/a	Disabled	5000	2
58	REFSEL	25	Clock Gen Integer	1	1	100	100	0	1	n/a	Disabled	5000	2
59	REFSEL	25	Clock Gen Integer	1	1	100	100	0	1	n/a	Disabled	5000	8
60	REFSEL	50	Clock Gen Integer	1	1	50	50	0	1	n/a	Disabled	5000	8
61	REFSEL	25	Clock Gen Integer	1	1	100	100	0	1	n/a	Disabled	5000	8
62	REFSEL	50	Clock Gen Integer	1	1	50	50	0	1	n/a	Disabled	5000	8
63	REFSEL	25	Clock Gen Fractional	1	1	100	100	0	1	n/a	Disabled	5000	8

Copyright © 2015–2016, Texas Instruments Incorporated

Table 17. Default ROM Contents (HW_SW_CTRL = 1) - Outputs [0-4] Configuration

GPIO[5:0] (decimal)	OUT0-1 DIVIDER	OUT0-1 FREQ (MHz)	OUT0 TYPE	OUT1 TYPE	OUT2-3 DIVIDER	OUT2-3 FREQ (MHz)	OUT2 TYPE	OUT3 TYPE	OUT4 DIV	OUT4 FREQ (MHz)	OUT4 MUX SELECT	OUT4 TYPE
0	5	200	LVDS	LVDS	10	100	LVDS	LVDS	1	n/a	n/a	Disable
1	5	200	LVDS	LVDS	10	100	LVDS	LVDS	1	n/a	n/a	Disable
2	10	100	LVDS	LVDS	10	100	LVDS	LVDS	8	125	PLL	LVDS
3	4	312.5	LVDS	LVDS	8	156.25	LVPECL	LVPECL	10	125	PLL	LVDS
4	20	125	LVPECL	LVPECL	16	156.25	LVPECL	LVPECL	25	100	PLL	LVPECL
5	16	156.25	LVPECL	LVPECL	16	156.25	LVPECL	LVPECL	16	156.25	PLL	LVPECL
6	4	307.2	LVPECL	LVPECL	5	245.76	LVDS	LVDS	8	153.6	PLL	LVDS
7	4	307.2	LVPECL	LVPECL	5	245.76	LVPECL	LVPECL	8	153.6	PLL	LVDS
8	4	307.2	LVPECL	LVPECL	5	245.76	LVDS	LVDS	8	153.6	PLL	LVDS
9	6	106.25	LVPECL	LVPECL	6	106.25	LVPECL	LVPECL	3	212.5	PLL	LVPECL
10	6	106.25	LVDS	LVDS	6	106.25	LVDS	LVDS	3	212.5	PLL	LVDS
11	16	156.25	LVPECL	LVPECL	20	125	LVPECL	LVPECL	25	100	PLL	HCSL
12	16	156.25	LVDS	LVDS	20	125	LVDS	LVDS	25	100	PLL	HCSL
13	16	106.25	LVPECL	LVPECL	16	106.25	LVPECL	LVPECL	17	100	PLL	HCSL
14	16	106.25	LVDS	LVDS	16	106.25	LVDS	LVDS	17	100	PLL	HCSL
15	4	425	LVPECL	LVPECL	8	212.5	LVPECL	LVPECL	17	100	PLL	HCSL
16	4	425	LVDS	LVDS	8	212.5	LVDS	LVDS	17	100	PLL	HCSL
17	4	156.25	LVPECL	LVPECL	4	156.25	LVPECL	LVPECL	4	156.25	PLL	LVPECL
18	4	156.25	LVDS	LVDS	4	156.25	LVDS	LVDS	4	156.25	PLL	LVDS
19	4	156.25	LVPECL	LVPECL	4	156.25	LVPECL	LVPECL	4	156.25	PLL	LVPECL
20	4	156.25	LVDS	LVDS	4	156.25	LVDS	LVDS	4	156.25	PLL	LVDS
21	4	156.25	LVPECL	LVPECL	4	156.25	LVPECL	LVPECL	4	156.25	PLL	LVPECL
22	4	156.25	LVDS	LVDS	4	156.25	LVDS	LVDS	4	156.25	PLL	LVDS
23	16	156.25	LVPECL	LVPECL	16	156.25	LVPECL	LVPECL	25	100	PLL	LVDS
24	16	156.25	LVDS	LVDS	16	156.25	LVDS	LVDS	25	100	PLL	LVDS
25	16	156.25	LVPECL	LVPECL	16	156.25	LVPECL	LVPECL	25	100	PLL	LVDS
26	16	156.25	LVDS	LVDS	16	156.25	LVDS	LVDS	25	100	PLL	LVDS
27	16	156.25	LVPECL	LVPECL	25	100	LVPECL	LVPECL	50	50	PLL	LVPECL
28	4	156.25	LVPECL	LVPECL	4	156.25	LVPECL	LVPECL	4	156.25	PLL	LVPECL
29	4	156.25	LVPECL	LVPECL	4	156.25	LVPECL	LVPECL	4	156.25	PLL	LVPECL
30	8	312.5	LVDS	LVDS	16	156.25	LVPECL	LVPECL	16	156.25	PLL	LVDS
31	16	156.25	LVPECL	LVPECL	16	156.25	LVPECL	LVPECL	16	156.25	PLL	LVPECL
32	4	625	LVDS	LVDS	4	625	LVPECL	LVPECL	25	100	PLL	LVDS

Copyright © 2015–2016, Texas Instruments Incorporated

Table 17. Default ROM Contents (HW_SW_CTRL = 1) - Outputs [0-4] Configuration (continued)

GPIO[5:0] (decimal)	OUT0-1 DIVIDER	OUT0-1 FREQ (MHz)	OUT0 TYPE	OUT1 TYPE	OUT2-3 DIVIDER	OUT2-3 FREQ (MHz)	OUT2 TYPE	OUT3 TYPE	OUT4 DIV	OUT4 FREQ (MHz)	OUT4 MUX SELECT	OUT4 TYPE
33	4	156.25	LVPECL	LVPECL	4	156.25	LVPECL	LVPECL	4	156.25	PLL	LVPECL
34	4	156.25	LVDS	LVDS	4	156.25	LVPECL	LVPECL	4	156.25	PLL	LVDS
35	4	156.25	LVPECL	LVPECL	4	156.25	LVPECL	LVPECL	4	156.25	PLL	LVPECL
36	4	156.25	LVDS	LVDS	4	156.25	LVPECL	LVPECL	4	156.25	PLL	LVDS
37	4	156.25	LVPECL	LVPECL	5	125	LVDS	LVDS	5	125	PLL	LVDS
38	4	156.25	LVDS	LVDS	5	125	LVDS	LVDS	5	125	PLL	LVDS
39	4	156.25	LVPECL	LVPECL	5	125	HCSL	HCSL	5	125	PLL	LVDS
40	4	156.25	LVDS	LVDS	5	125	LVDS	LVDS	5	125	PLL	LVDS
41	2	311.04	LVPECL	LVPECL	4	155.52	LVDS	LVDS	4	155.52	PLL	LVPECL
42	2	311.04	LVDS	LVDS	4	155.52	LVPECL	LVPECL	4	155.52	PLL	LVDS
43	1	622.08	LVPECL	LVPECL	1	622.08	LVPECL	LVPECL	4	155.52	PLL	LVDS
44	1	622.08	LVDS	LVDS	1	622.08	LVPECL	LVPECL	4	155.52	PLL	LVDS
45	10	100	LVPECL	LVPECL	10	100	LVPECL	LVPECL	4	250	PLL	LVPECL
46	10	100	LVDS	LVDS	10	100	LVPECL	LVPECL	4	250	PLL	LVDS
47	25	25	LVPECL	LVPECL	2	312.5	LVPECL	LVPECL	4	156.25	PLL	LVPECL
48	25	25	LVDS	LVDS	2	312.5	LVDS	LVDS	4	156.25	PLL	LVDS
49	25	25	LVPECL	LVPECL	4	156.25	LVPECL	LVPECL	4	156.25	PLL	LVPECL
50	25	25	LVDS	LVDS	4	156.25	LVDS	LVDS	4	156.25	PLL	LVDS
51	25	106.25	LVPECL	LVPECL	25	106.25	LVPECL	LVPECL	17	156.25	PLL	LVPECL
52	25	106.25	LVDS	LVDS	25	106.25	LVDS	LVDS	17	156.25	PLL	LVDS
53	4	161.1328125	LVPECL	LVPECL	4	161.1328125	LVPECL	LVPECL	2	322.265625	PLL	LVPECL
54	4	161.1328125	LVDS	LVDS	4	161.1328125	LVPECL	LVPECL	2	322.265625	PLL	LVDS
55	4	161.1328125	LVPECL	LVPECL	4	161.1328125	LVPECL	LVPECL	2	322.265625	PLL	LVPECL
56	4	161.1328125	LVDS	LVDS	4	161.1328125	LVPECL	LVPECL	2	322.265625	PLL	LVDS
57	16	156.25	LVPECL	LVPECL	16	156.25	LVPECL	LVPECL	25	100	PLL	HCSL
58	16	156.25	LVDS	LVDS	16	156.25	LVDS	LVDS	25	100	PLL	HCSL
59	2	312.5	LVPECL	LVPECL	2	312.5	LVPECL	LVPECL	2	312.5	PLL	LVPECL
60	2	312.5	LVPECL	LVPECL	2	312.5	LVPECL	LVPECL	2	312.5	PLL	LVPECL
61	4	156.25	LVPECL	LVPECL	4	156.25	LVPECL	LVPECL	4	156.25	PLL	LVPECL
62	4	156.25	LVPECL	LVPECL	4	156.25	LVPECL	LVPECL	4	156.25	PLL	LVPECL
63	5	125	LVPECL	LVPECL	5	125	LVPECL	LVPECL	5	125	PLL	LVPECL

Copyright © 2015–2016, Texas Instruments Incorporated

Table 18. Default ROM Contents (HW_SW_CTRL = 1) - Outputs [5-7] Configuration

GPIO[5:0] (decimal)	OUT5 DIV	OUT5 FREQ (MHz)	OUT5 MUX SELECT	OUT5 TYPE	OUT6 DIV	OUT6 FREQ (MHz)	OUT6 MUX SELECT	OUT6 TYPE	OUT7 DIV	OUT7 FREQ (MHz)	OUT7 MUX SELECT	OUT7 TYPE
0	1	n/a	n/a	Disable	1	n/a	n/a	Disable	1	n/a	n/a	Disable
1	1	n/a	n/a	Disable	1	n/a	n/a	Disable	1	n/a	n/a	Disable
2	8	125	PLL	LVDS	8	125	PLL	LVDS	8	125	PLL	LVDS
3	10	125	PLL	LVDS	25	50	PLL	LVDS	25	50	PLL	LVDS
4	20	125	PLL	LVPECL	16	156.25	PLL	LVPECL	16	156.25	PLL	LVPECL
5	20	125	PLL	LVPECL	20	125	PLL	LVPECL	20	125	PLL	LVPECL
6	8	153.6	PLL	LVDS	10	122.88	PLL	LVDS	10	122.88	PLL	LVDS
7	8	153.6	PLL	LVDS	10	122.88	PLL	LVDS	10	122.88	PLL	LVDS
8	8	153.6	PLL	LVDS	10	122.88	PLL	LVDS	10	122.88	PLL	LVDS
9	3	212.5	PLL	LVPECL	3	212.5	PLL	LVPECL	3	212.5	PLL	LVPECL
10	3	212.5	PLL	LVDS	3	212.5	PLL	LVDS	3	212.5	PLL	LVDS
11	25	100	PLL	HCSL	100	25	PLL	LVDS	100	25	PLL	LVCMOS
12	25	100	PLL	HCSL	100	25	PLL	LVDS	100	25	PLL	LVCMOS
13	17	100	PLL	HCSL	17	100	PLL	HCSL	17	100	PLL	HCSL
14	17	100	PLL	HCSL	17	100	PLL	HCSL	17	100	PLL	HCSL
15	34	50	PLL	LVDS	3	566.67	PLL	LVPECL	16	106.25	PLL	LVDS
16	34	50	PLL	LVDS	3	566.67	PLL	LVPECL	16	106.25	PLL	LVDS
17	4	156.25	PLL	LVPECL	5	125	PLL	LVPECL	5	125	PLL	LVPECL
18	4	156.25	PLL	LVDS	5	125	PLL	LVDS	5	125	PLL	LVDS
19	5	125	PLL	LVPECL	5	125	PLL	LVPECL	5	125	PLL	LVPECL
20	5	125	PLL	LVDS	5	125	PLL	LVDS	5	125	PLL	LVDS
21	5	125	PLL	LVPECL	5	125	PLL	LVPECL	5	125	PLL	LVPECL
22	5	125	PLL	LVDS	5	125	PLL	LVDS	5	125	PLL	LVDS
23	25	100	PLL	LVDS	20	125	PLL	LVDS	20	125	PLL	LVDS
24	25	100	PLL	LVDS	20	125	PLL	LVDS	20	125	PLL	LVDS
25	25	100	PLL	LVDS	20	125	PLL	LVDS	20	125	PLL	LVDS
26	25	100	PLL	LVDS	20	125	PLL	LVDS	20	125	PLL	LVDS
27	20	125	PLL	LVPECL	25	100	PLL	LVCMOS	100	25	PLL	LVCMOS
28	4	156.25	PLL	LVPECL	4	156.25	PLL	LVPECL	25	25	PLL	LVCMOS
29	25	25	PLL	LVCMOS	25	25	PLL	LVCMOS	25	25	PLL	LVCMOS
30	8	312.5	PLL	LVDS	25	100	PLL	LVDS	20	125	PLL	LVDS
31	25	100	PLL	HCSL	25	100	PLL	HCSL	100	25	PLL	LVPECL

Copyright © 2015–2016, Texas Instruments Incorporated

Table 18. Default ROM Contents (HW_SW_CTRL = 1) - Outputs [5-7] Configuration (continued)

GPIO[5:0] (decimal)	OUT5 DIV	OUT5 FREQ (MHz)	OUT5 MUX SELECT	OUT5 TYPE	OUT6 DIV	OUT6 FREQ (MHz)	OUT6 MUX SELECT	OUT6 TYPE	OUT7 DIV	OUT7 FREQ (MHz)	OUT7 MUX SELECT	OUT7 TYPE
32	25	100	PLL	LVDS	25	100	PLL	LVDS	25	100	PLL	LVDS
33	4	156.25	PLL	LVPECL	5	125	PLL	LVDS	5	125	PLL	LVCMOS
34	4	156.25	PLL	LVDS	5	125	PLL	LVDS	5	125	PLL	LVCMOS
35	4	156.25	PLL	LVPECL	5	125	PLL	LVDS	5	125	PLL	LVCMOS
36	4	156.25	PLL	LVDS	5	125	PLL	LVDS	5	125	PLL	LVCMOS
37	4	156.25	PLL	LVPECL	5	125	PLL	LVDS	5	125	PLL	LVCMOS
38	4	156.25	PLL	LVDS	5	125	PLL	LVDS	5	125	PLL	LVCMOS
39	4	156.25	PLL	LVPECL	5	125	PLL	LVDS	5	125	PLL	LVCMOS
40	4	156.25	PLL	LVDS	5	125	PLL	LVDS	5	125	PLL	LVCMOS
41	4	155.52	PLL	LVPECL	8	77.76	PLL	LVDS	8	77.76	PLL	LVDS
42	4	155.52	PLL	LVDS	8	77.76	PLL	LVDS	8	77.76	PLL	LVDS
43	4	155.52	PLL	LVDS	8	77.76	PLL	LVDS	8	77.76	PLL	LVDS
44	4	155.52	PLL	LVDS	8	77.76	PLL	LVDS	8	77.76	PLL	LVDS
45	4	250	PLL	LVPECL	40	25	PLL	LVCMOS	15	66.67	PLL	LVCMOS
46	4	250	PLL	LVDS	40	25	PLL	LVCMOS	15	66.67	PLL	LVCMOS
47	10	62.5	PLL	LVPECL	5	125	PLL	LVPECL	2	312.5	PLL	LVPECL
48	10	62.5	PLL	LVDS	5	125	PLL	LVDS	2	312.5	PLL	LVDS
49	5	125	PLL	LVPECL	5	125	PLL	LVPECL	5	125	PLL	LVPECL
50	5	125	PLL	LVDS	5	125	PLL	LVDS	5	125	PLL	LVDS
51	17	156.25	PLL	LVPECL	17	156.25	PLL	LVPECL	17	156.25	PLL	LVPECL
52	17	156.25	PLL	LVDS	17	156.25	PLL	LVDS	17	156.25	PLL	LVDS
53	2	322.265625	PLL	LVPECL	2	322.265625	PLL	LVPECL	2	322.265625	PLL	LVPECL
54	2	322.265625	PLL	LVDS	2	322.265625	PLL	LVDS	2	322.265625	PLL	LVDS
55	2	322.265625	PLL	LVPECL	2	322.265625	PLL	LVPECL	2	322.265625	PLL	LVPECL
56	2	322.265625	PLL	LVDS	2	322.265625	PLL	LVDS	2	322.265625	PLL	LVDS
57	25	100	PLL	HCSL	25	100	PLL	HCSL	25	100	PLL	HCSL
58	25	100	PLL	HCSL	25	100	PLL	HCSL	25	100	PLL	HCSL
59	2	312.5	PLL	LVPECL	2	312.5	PLL	LVPECL	2	312.5	PLL	LVPECL
60	2	312.5	PLL	LVPECL	2	312.5	PLL	LVPECL	2	312.5	PLL	LVPECL
61	4	156.25	PLL	LVPECL	4	156.25	PLL	LVPECL	4	156.25	PLL	LVPECL
62	4	156.25	PLL	LVPECL	4	156.25	PLL	LVPECL	4	156.25	PLL	LVPECL
63	5	125	PLL	LVPECL	5	125	PLL	LVPECL	5	125	PLL	LVPECL

Copyright © 2015–2016, Texas Instruments Incorporated

10.6 Register Maps

The register map is shown in the table below. The registers occupy a single unified address space and all registers are accessible at any time. A total of 103 registers are present in the LMK03318.

Name	Address	Reset	Bit7	Bit6	Bit5	Bit4	Bit3	Bit2	Bit1	Bit0
VNDRID_BY1	0	0x10	VNDRID[15:8]							
VNDRID_BY0	1	0x0B	VNDRID[7:0]							
PRODID	2	0x31	PRODID[7:0]							
REVID	3	0x01	REVID[7:0]							
PARTID	4	0x01	PRTID[7:0]							
PINMODE_SW	8	0x00	HW_SW_CTRL_MODE	GPIO32_SW_MODE[2:0]			RSRVD			
PINMODE_HW	9	0x00	GPIO_HW_MODE[5:0]						RSRVD	
SLAVEADR	10	0x50	SLAVEADR_GPIO1_SW[7:1]							RSRVD
EEREV	11	0x00	EEREV[7:0]							
DEV_CTL	12	0xD9	RESETN_SW	SYNCN_SW	RSRVD	SYNC_AUTO	SYNC_MUTE	AONAFTER LOCK	PLLSTRTMODE	AUTOSTRT
INT_LIVE	13	0x00	LOL	LOS	CAL	RSRVD			SECTOPRI	RSRVD
INT_MASK	14	0x00	LOL_MASK	LOS_MASK	CAL_MASK	RSRVD			SECTOPRI_MASK	RSRVD
INT_FLAG_POL	15	0x00	LOL_POL	LOS_POL	CAL_POL	RSRVD			SECTOPRI_POL	RSRVD
INT_FLAG	16	0x00	LOL_INTR	LOS_INTR	CAL_INTR	RSRVD			SECTOPRI_INTR	RSRVD
INTCTL	17	0x00	RSRVD						INT_AND_OR	INT_EN
OSCCTL2	18	0x00	RISE_VALID_SEC	FALL_VALID_SEC	RISE_VALID_PRI	FALL_VALID_PRI	RSRVD			
STATCTL	19	0x00	RSRVD		STAT1_SHOOT_THRU_LIMIT	STAT0_SHOOT_THRU_LIMIT	RSRVD		STAT1_OPEND	STAT0_OPEND
MUTELVL1	20	0x55	CH3_MUTE_LVL[1:0]		CH2_MUTE_LVL[1:0]		CH1_MUTE_LVL[1:0]		CH0_MUTE_LVL[1:0]	
MUTELVL2	21	0x55	CH7_MUTE_LVL[1:0]		CH6_MUTE_LVL[1:0]		CH5_MUTE_LVL[1:0]		CH4_MUTE_LVL[1:0]	
OUT_MUTE	22	0xFF	CH_7_MUTE	CH_6_MUTE	CH_5_MUTE	CH_4_MUTE	CH_3_MUTE	CH_2_MUTE	CH_1_MUTE	CH_0_MUTE
STATUS_MUTE	23	0x02	RSRVD						STATUS1_MUTE	STATUS0_MUTE
DYN_DLY	24	0x00	RSRVD		DIV_7_DYN_DLY	DIV_6_DYN_DLY	DIV_5_DYN_DLY	DIV_4_DYN_DLY	DIV_23_DYN_DLY	DIV_01_DYN_DLY
REFDETCTL	25	0x55	DETECT_MODE_SEC[1:0]		DETECT_MODE_PRI[1:0]		LVL_SEL_SEC[1:0]		LVL_SEL_PRI[1:0]	
STAT0_INT	27	0x58	STAT0_SEL[3:0]				STAT0_POL	RSRVD		
STAT1	28	0x28	STAT1_SEL[3:0]				STAT1_POL	RSRVD		

Copyright © 2015–2016, Texas Instruments Incorporated

Register Maps (continued)

Name	Address	Reset	Bit7	Bit6	Bit5	Bit4	Bit3	Bit2	Bit1	Bit0
OSCCTL1	29	0x06	DETECT_BYP	RSRVD	TERM2GND_ SEC	TERM2GND_ PRI	DIFFTERM_SEC	DIFFTERM_PRI	AC_MODE_SEC	AC_MODE_PRI
PWDN	30	0x00	RSRVD	CMOSCHPWDN	CH7PWDN	CH6PWDN	CH5PWDN	CH4PWDN	CH23PWDN	CH01PWDN
OUTCTL_0	31	0xB0	RSRVD	OUT_0_SEL[1:0]		OUT_0_MODE1[1:0]		OUT_0_MODE2[1:0]		RSRVD
OUTCTL_1	32	0x30	RSRVD	OUT_1_SEL[1:0]		OUT_1_MODE1[1:0]		OUT_1_MODE2[1:0]		RSRVD
OUTDIV_0_1	33	0x01	OUT_0_1_DIV[7:0]							
OUTCTL_2	34	0xB0	RSRVD	OUT_2_SEL[1:0]		OUT_2_MODE1[1:0]		OUT_2_MODE2[1:0]		RSRVD
OUTCTL_3	35	0x30	RSRVD	OUT_3_SEL[1:0]		OUT_3_MODE1[1:0]		OUT_3_MODE2[1:0]		RSRVD
OUTDIV_2_3	36	0x03	OUT_2_3_DIV[7:0]							
OUTCTL_4	37	0x18	CH_4_MUX[1:0]		OUT_4_SEL[1:0]		OUT_4_MODE1[1:0]		OUT_4_MODE2[1:0]	
OUTDIV_4	38	0x02	OUT_4_DIV[7:0]							
OUTCTL_5	39	0x18	CH_5_MUX[1:0]		OUT_5_SEL[1:0]		OUT_5_MODE1[1:0]		OUT_5_MODE2[1:0]	
OUTDIV_5	40	0x02	OUT_5_DIV[7:0]							
OUTCTL_6	41	0x18	CH_6_MUX[1:0]		OUT_6_SEL[1:0]		OUT_6_MODE1[1:0]		OUT_6_MODE2[1:0]	
OUTDIV_6	42	0x05	OUT_6_DIV[7:0]							
OUTCTL_7	43	0x18	CH_7_MUX[1:0]		OUT_7_SEL[1:0]		OUT_7_MODE1[1:0]		OUT_7_MODE2[1:0]	
OUTDIV_7	44	0x05	OUT_7_DIV[7:0]							
CMOSDIVCTRL	45	0x0A	RSRVD		PLLCMOSPREDIV[1:0]		STATUS1MUX[1:0]		STATUS0MUX[1:0]	
CMOSDIV0	46	0x00	CMOSDIV0[7:0]							
STATUS_SLEW	49	0x00	RSRVD				STATUS1SLEW[1:0]		STATUS0SLEW[1:0]	
IPCLKSEL	50	0x95	SECBUFSEL[1:0]		PRIBUFSEL[1:0]		RSRVD		INSEL_PLL[1:0]	
IPCLKCTL	51	0x03	CLKMUX_ BYPASS	RSRVD				SECONSWITCH	SECBUFGAIN	PRIBUFGAIN
PLL_RDIV	52	0x00	RSRVD					PLLRDIV[2:0]		
PLL_MDIV	53	0x00	RSRVD			PLLMDIV[4:0]				
PLL_CTRL0	56	0x1E	RSRVD			PLL_P[2:0]			PLL_SYNC_EN	PLL_PDN
PLL_CTRL1	57	0x18	RSRVD			PRI_D	PLL_CP[3:0]			
PLL_NDIV_BY1	58	0x00	RSRVD				PLL_NDIV[11:8]			
PLL_NDIV_BY0	59	0x66	PLL_NDIV[7:0]							
PLL_ FRACNUM_BY2	60	0x00	RSRVD		PLL_NUM[21:16]					
PLL_ FRACNUM_BY1	61	0x00	PLL_NUM[15:8]							
PLL_ FRACNUM_BY0	62	0x00	PLL_NUM[7:0]							

Copyright © 2015–2016, Texas Instruments Incorporated

Register Maps (continued)

Name	Address	Reset	Bit7	Bit6	Bit5	Bit4	Bit3	Bit2	Bit1	Bit0
PLL_ FRACDEN_BY2	63	0x00	RSRVD		PLL_DEN[21:16]					
PLL_ FRACDEN_BY1	64	0x00	PLL_DEN[15:8]							
PLL_ FRACDEN_BY0	65	0x00	PLL_DEN[7:0]							
PLL_ MASHCTRL	66	0x0C	RSRVD				PLL_DTHRMODE[1:0]		PLL_ORDER[1:0]	
PLL_LF_R2	67	0x24	RSRVD		PLL_LF_R2[5:0]					
PLL_LF_C1	68	0x00	RSRVD					PLL_LF_C1[2:0]		
PLL_LF_R3	69	0x00	RSRVD	PLL_LF_R3[5:0]						PLL_LF_INT_FR AC
PLL_LF_C3	70	0x00	RSRVD					PLL_LF_C3[2:0]		
SEC_CTRL	72	0x18	RSRVD			SEC_D	RSRVD			
XO_MARGINING	86	0x00	RSRVD	MARGIN_DIG_STEP[2:0]			MARGIN_OPTION[1:0]		RSRVD	RSRVD
XO_OFFSET_ GPIO5_STEP_1 _BY1	88	0x00	RSRVD						XOOFFSET_STEP1[9:8]	
XO_OFFSET_ GPIO5_STEP_1 _BY0	89	0xDE	XOOFFSET_STEP1[7:0]							
XO_OFFSET_ GPIO5_STEP_2 _BY1	90	0x01	RSRVD						XOOFFSET_STEP2[9:8]	
XO_OFFSET_ GPIO5_STEP_2 _BY0	91	0x18	XOOFFSET_STEP2[7:0]							
XO_OFFSET_ GPIO5_STEP_3 _BY1	92	0x01	RSRVD						XOOFFSET_STEP3[9:8]	
XO_OFFSET_ GPIO5_STEP_3 _BY0	93	0x4B	XOOFFSET_STEP3[7:0]							
XO_OFFSET_ GPIO5_STEP_4 _BY1	94	0x01	RSRVD						XOOFFSET_STEP4[9:8]	
XO_OFFSET_ GPIO5_STEP_4 _BY0	95	0x86	XOOFFSET_STEP4[7:0]							

Copyright © 2015–2016, Texas Instruments Incorporated

Register Maps (continued)

Name	Address	Reset	Bit7	Bit6	Bit5	Bit4	Bit3	Bit2	Bit1	Bit0
XO_OFFSET_GPIO5_STEP_5_BY1	96	0x01	RSRVD						XOOFFSET_STEP5[9:8]	
XO_OFFSET_GPIO5_STEP_5_BY0	97	0xBE	XOOFFSET_STEP5[7:0]							
XO_OFFSET_GPIO5_STEP_6_BY1	98	0x01	RSRVD						XOOFFSET_STEP6[9:8]	
XO_OFFSET_GPIO5_STEP_6_BY0	99	0xFE	XOOFFSET_STEP6[7:0]							
XO_OFFSET_GPIO5_STEP_7_BY1	100	0x02	RSRVD						XOOFFSET_STEP7[9:8]	
XO_OFFSET_GPIO5_STEP_7_BY0	101	0x47	XOOFFSET_STEP7[7:0]							
XO_OFFSET_GPIO5_STEP_8_BY1	102	0x02	RSRVD						XOOFFSET_STEP8[9:8]	
XO_OFFSET_GPIO5_STEP_8_BY0	103	0x9E	XOOFFSET_STEP8[7:0]							
XO_OFFSET_SW_BY1	104	0x00	RSRVD						XOOFFSET_SW[9:8]	
XO_OFFSET_SW_BY0	105	0x00	XOOFFSET_SW[7:0]							
PLL_CTRL2	117	0x00	PLL_STRETCH	RSRVD						
PLL_CTRL3	118	0x03	RSRVD					PLL_DISABLE_4TH[2:0]		
PLL_CALCTRL0	119	0x01	RSRVD				PLL_CLSDWAIT[1:0]		PLL_VCOWAIT[1:0]	
PLL_CALCTRL1	120	0x00	RSRVD							PLL_LOOPBW
NVMSCRC	135	0x00	NVMSCRC[7:0]							
NVMCNT	136	0x00	NVMCNT[7:0]							
NVMCTL	137	0x10	RSRVD	REGCOMMIT	NVMCRCERR	NVMAUTOCRC	NVMCOMMIT	NVMBUSY	RSRVD	NVMPROG
NVMLCRC	138	0x00	NVMLCRC[7:0]							
MEMADR_BY1	139	0x00	RSRVD				MEMADR[11:8]			

Copyright © 2015–2016, Texas Instruments Incorporated

Register Maps (continued)

Name	Address	Reset	Bit7	Bit6	Bit5	Bit4	Bit3	Bit2	Bit1	Bit0
MEMADR_BY0	140	0x00	MEMADR[7:0]							
NVMDAT	141	0x00	NVMDAT[7:0]							
RAMDAT	142	0x00	RAMDAT[7:0]							
ROMDAT	143	0x00	ROMDAT[7:0]							
NVMUNLK	144	0x00	NVMUNLK[7:0]							
REGCOMMIT_ PAGE	145	0x00	RSRVD				REGCOMMIT_PG[3:0]			
XOCAPCTRL_ BY1	199	0x00	RSRVD						XO_CAP_CTRL[9:8]	
XOCAPCTRL_ BY0	200	0x00	XO_CAP_CTRL[7:0]							

Copyright © 2015–2016, Texas Instruments Incorporated

10.6.1 VNDRID_BY1 Register; R0

The VNDRID_BY1 and VNDRID_BY0 registers are used to store the unique 16-bit Vendor Identification number assigned to I^2C vendors.

Bit #	Field	Type	Reset	EEPROM	Description
[7:0]	VNDRID[15:8]	R	0x10	N	Vendor Identification Number Byte 1. The Vendor Identification Number is a unique 16-bit identification number assigned to I^2C vendors.

10.6.2 VNDRID_BY0 Register; R1

The VNDRID_BY0 register is described in the following table.

Bit #	Field	Type	Reset	EEPROM	Description
[7:0]	VNDRID[7:0]	R	0x0B	N	Vendor Identification Number Byte 0.

10.6.3 PRODID Register; R2

The PRODID register is used to identify the LMK03318 device.

Bit #	Field	Type	Reset	EEPROM	Description
[7:0]	PRODID[7:0]	R	0x31	N	Product Identification Number. The Product Identification Number is a unique 8-bit identification number used to identify the LMK03318.

10.6.4 REVID Register; R3

The REVID register is used to identify the LMK03318 mask revision.

Bit #	Field	Type	Reset	EEPROM	Description
[7:0]	REVID[7:0]	R	0x01	N	Device Revision Number. The Device Revision Number is used to identify the LMK03318 die revision

10.6.5 PARTID Register; R4

Each LMK03318 device can be identified by a unique 8-bit number stored in the PARTID register. This register is always initialized from on-chip EEPROM.

Bit #	Field	Type	Reset	EEPROM	Description
[7:0]	PRTID[7:0]	R	0x01	Y	Part Identification Number. The Part Identification Number is a unique 8-bit number which is used to serialize individual LMK03318 devices. The Part Identification Number is factory programmed and cannot be modified by the user.

10.6.6 PINMODE_SW Register; R8

The PINMODE_SW register records the device configuration setting. The configuration setting is registered when the reset is deasserted.

Bit #	Field	Type	Reset	EEPROM	Description		
[7]	HW_SW_CTRL_MODE	R	0	N	HW_SW_CTRL Pin Configuration. The HW_SW_CTRL_MODE field reflects the values sampled on the HW_SW_CTRL pin on the most recent device reset.		
					HW_SW_CTRL_MODE	HW_SW_CTRL	
					0	Soft Pin Mode	
					1	Hard Pin Mode	
[6:4]	GPIO32_SW_MODE[2:0]	R	0x0	N	GPIO32_SW Pin Configuration Mode. The GPIO_SW_MODE field reflects the values sampled on the GPIO[3:2] pins when HW_SW_CTRL is 0 on the most recent device reset. When HW_SW_CTRL is 1 this field reads back 0x0.		
					GPIO_SW_MODE	GPIO[3]	GPIO[2]
					0 (0x0)	0	0
					1 (0x1)	0	Z
					2 (0x2)	0	1
					3 (0x3)	1	0
					4 (0x4)	1	Z
					5 (0x5)	1	1
[3:0]	RSRVD	-	-	N	Reserved.		

10.6.7 PINMODE_HW Register; R9

The PINMODE_HW register records the device configuration setting. The configuration setting is registered when the reset is deasserted.

Bit #	Field	Type	Reset	EEPROM	Description	
[7:2]	GPIO_HW_MODE[5:0]	R	0x00	N	GPIO_HW[5:0] Pin Configuration Mode. The GPIO_HW_MODE field reflects the values sampled on pins GPIO[5:0] when HW_SW_CTRL is 1 on the most recent device reset. When HW_SW_CTRL is 0 this field reads back 0x0.	
					GPIO_HW_MODE	GPIO[5:0]
					0 (0x00)	0x00
					1 (0x01)	0x01
					2 (0x02)	0x02
					..	..
					..	..
					61 (0x3D)	0x3D
					62 (0x3E)	0x3E
					63 (0x3F)	0x3F
[1:0]	RSRVD	-	-	N	Reserved.	

10.6.8 SLAVEADR Register; R10

The SLAVEADR register reflects the 7-bit I^2C Slave Address value initialized from on-chip EEPROM.

Bit #	Field	Type	Reset	EEPROM	Description	
[7:1]	SLAVEADR_GPIO1_SW[7:1]	R	0x50	Y	I^2C Slave Address. This field holds the 7-bit Slave Address used to identify this device during I^2C transactions. When HW_SW_CTRL is 0 the two least significant bits of the address can be configured using GPIO[1] as shown. When HW_SW_CTRL is 1 then the two least significant bits are 00.	
					SLAVEADR_GPIO1_SW[2:1]	GPIO[1]
					0 (0x0)	0
					1 (0x1)	V_{IM}
					3 (0x3)	1
[0]	RSRVD	-	-	N	Reserved.	

Copyright © 2015–2016, Texas Instruments Incorporated

10.6.9 EEREV Register; R11

The EEREV register provides EEPROM/ROM image revision record and is initialized from EEPROM or ROM.

Bit #	Field	Type	Reset	EEPROM	Description
[7:0]	EEREV[7:0]	R	0x0	Y	EEPROM Image Revision ID. EEPROM Image Revision is automatically retrieved from EEPROM and stored in the EEREV register after a reset or after a EEPROM commit operation.

10.6.10 DEV_CTL Register; R12

The DEV_CTL register holds the control functions described in the following table.

Bit #	Field	Type	Reset	EEPROM	Description
[7]	RESETN_SW	RW	1	N	Software Reset ALL functions (active low). Writing a 0 will cause the device to return to its power-up state apart from the I^2C registers and the configuration controller. The configuration controller is excluded to prevent a re-transfer of EEPROM data to on-chip registers.
[6]	SYNCN_SW	RW	1	N	Software SYNC Assertion (active low). Writing a 0 to this bit is equivalent to asserting the GPIO0 pin.
[5]	RSRVD	-	-	N	Reserved.
[4]	SYNC_AUTO	RW	1	Y	Automatic Synchronization at startup. When SYNC_AUTO is 1 at device startup a synchronization sequence is initiated automatically after PLL lock has been achieved.
[3]	SYNC_MUTE	RW	1	Y	Synchronization Mute Control. The SYNC_MUTE field determines whether or not the output drivers are muted during a Synchronization event. SYNC_MUTE — SYNC Mute Behaviour 0 — Do not mute any outputs during SYNC 1 — Mute all outputs during SYNC
[2]	AONAFTERLOCK	RW	0	Y	Always On Clock behaviour after Lock. If AONAFTERLOCK is 0 then the system clock is switched from the Always On Clock to the VCO Clock after lock and the Always On Clock oscillator is disabled. If AONAFTERLOCK is 1 then the Always on Clock will remain as the digital system clock regardless of the PLL Lock state. It is recommended that AONAFTERLOCK be set to 1.
[1]	RSRVD	RW	0	Y	Reserved.
[0]	AUTOSTRT	RW	1	Y	Autostart. If AUTOSTRT is set to 1 the device will automatically attempt to achieve lock and enable outputs after a device reset. A device reset can be triggered by the power-on-reset, RESETn pin or by writing to the RESETN_SW bit. If AUTOSTRT is 0 then the device will halt after the configuration phase, a subsequent write to set the AUTOSTRT bit to 1 will trigger the PLL Lock sequence.

10.6.11 INT_LIVE Register; R13

The INT_LIVE register reflects the current status of the interrupt sources, regardless of the state of the INT_EN bit.

Bit #	Field	Type	Reset	EEPROM	Description
[7]	LOL	R	0	N	Loss of lock on PLL.
[6]	LOS	R	0	N	Loss of input signal to PLL. If input signal to PLL is lost and as a result PLL is unlocked, LOS will take precedence over LOL and only LOS will be set to 1.
[5]	CAL	R	0	N	VCO calibration active on PLL.
[4:2]	RSRVD	-	-	N	Reserved.
[1]	SECTOPRI	R	0	N	Switch from secondary reference to primary reference in automatic mode for PLL.
[0]	RSRVD	-	-	N	Reserved.

10.6.12 INT_MASK Register; R14

The INT_MASK register allows masking of the interrupt sources.

Bit #	Field	Type	Reset	EEPROM	Description
[7]	LOL_MASK	RW	0	Y	Mask loss of lock on PLL. When LOL_MASK is 1 then the LOL interrupt source is masked and will not cause the interrupt signal to be activated.
[6]	LOS_MASK	RW	0	Y	Mask loss of input signal to PLL. When LOS_MASK is 1 then the LOS interrupt source is masked and will not cause the interrupt signal to be activated.
[5]	CAL_MASK	RW	0	Y	Mask VCO calibration active on PLL. When CAL_MASK is 1 then the CAL interrupt source is masked and will not cause the interrupt signal to be activated.
[4:2]	RSRVD	RW	0	Y	Reserved.
[1]	SECTOPRI_MASK	RW	0	Y	Mask switch from secondary reference to primary reference for PLL. When SECTOPRI_MASK is 1 then the SECTOPRI interrupt source is masked and will not cause the interrupt signal to be activated.
[0]	RSRVD	RW	0	Y	Reserved.

10.6.13 INT_FLAG_POL Register; R15

The INT_FLAG_POL register controls the signal polarity that sets the Interrupt Flags.

Bit #	Field	Type	Reset	EEPROM	Description
[7]	LOL_POL	RW	0	Y	LOL Flag Polarity. When LOL_POL is 1 then a rising edge on LOL will set the LOL_INTR bit of the INTERRUPT_FLAG register. When LOL_POL is 0 then a falling edge on LOL will set the LOL_INTR bit.
[6]	LOS_POL	RW	0	Y	LOS Flag Polarity. When LOS_POL is 1 then a rising edge on LOS will set the LOS_INTR bit of the INTERRUPT_FLAG register. When LOS_POL is 0 then a falling edge on LOS will set the LOS_INTR bit.
[5]	CAL_POL	RW	0	Y	CAL Flag Polarity. When CAL_POL is 1 then a rising edge on CAL will set the CAL_INTR bit of the INTERRUPT_FLAG register. When CAL_POL is 0 then a falling edge on CAL1 will set the CAL_INTR bit.
[4:2]	RSRVD	RW	0	Y	Reserved.
[1]	SECTOPRI_POL	RW	0	Y	SECTOPRI Flag Polarity. When SECTOPRI_POL is 1 then a rising edge on SECTOPRI will set the SECTOPRI_INTR bit of the INTERRUPT_FLAG register. When SECTOPRI_POL is 0 then a falling edge on SECTOPRI will set the SECTOPRI_INTR bit.
[0]	RSRVD	RW	0	Y	Reserved.

10.6.14 INT_FLAG Register; R16

The INT_FLAG register records rising or falling edges on the interrupt sources. The polarity is controlled by the INT_FLAG_POL register. This register is only updated if the INT_EN register bit is set to 1.

Bit #	Field	Type	Reset	EEPROM	Description
[7]	LOL_INTR	R	0	N	LOL Interrupt. The LOL_INTR bit is set when an edge of the correct polarity is detected on the LOL interrupt source. The LOL_INTR bit is cleared by writing a 0.
[6]	LOS_INTR	R	0	N	LOS Interrupt. The LOS_INTR bit is set when an edge of the correct polarity is detected on the LOS interrupt source. The LOS_INTR bit is cleared by writing a 0.
[5]	CAL_INTR	R	0	N	CAL Interrupt. The CAL_INTR bit is set when an edge of the correct polarity is detected on the CAL interrupt source. The CAL_INTR bit is cleared by writing a 0.
[4:2]	RSRVD	R	0	N	Reserved.
[1]	SECTOPRI_INTR	R	0	N	SECTOPRI Interrupt. The SECTOPRI_INTR bit is set when an edge of the correct polarity is detected on the SECTOPRI interrupt source. The SECTOPRI_INTR bit is cleared by writing a 0.
[0]	RSRVD	R	0	N	Reserved.

Copyright © 2015–2016, Texas Instruments Incorporated

10.6.15 INTCTL Register; R17

The INTCTL register allows configuration of the Interrupt operation.

Bit #	Field	Type	Reset	EEPROM	Description
[7:2]	RSRVD	-	-	N	Reserved.
[1]	INT_AND_OR	RW	0	Y	Interrupt AND/OR Combination. If INT_AND_OR is 1 then the interrupts are combined in an AND structure. In which case ALL un mAsked interrupt flags must be active in order to generate the interrupt. If INT_AND_OR is 0 then the interrupts are combined in an OR structure. In which case ANY un mAsked interrupt flags can generate the interrupt INT_AND_OR: Interrupt Function 0: OR 1: AND
[0]	INT_EN	RW	0	Y	Interrupt Enable. If INT_EN is 1 then the interrupt circuit is enabled, if INT_EN is 0 the interrupt circuit is disabled. When INT_EN is 0, interrupts cannot be signalled on the STATUS pins and the INT_FLAG registers will not be updated, however the INT_LIVE register will still reflect the current state of the internal interrupt signals.

10.6.16 OSCCTL2 Register; R18

The OSCCTL2 register provides access to input reference status signals

Bit #	Field	Type	Reset	EEPROM	Description
[7]	RISE_VALID_SEC	R	0	N	Secondary Input Rising Valid Indicator from Slew Rate Detector.
[6]	FALL_VALID_SEC	R	0	N	Secondary Input Falling Valid Indicator from Slew Rate Detector.
[5]	RISE_VALID_PRI	R	0	N	Primary Input Rising Valid Indicator from Slew Rate Detector.
[4]	FALL_VALID_PRI	R	0	N	Primary Input Falling Valid Indicator from Slew Rate Detector.
[3:0]	RSRVD	-	-	N	Reserved.

10.6.17 STATCTL Register; R19

The STATCTL register provides to STATUS0/1 output driver control signals.

Bit #	Field	Type	Reset	EEPROM	Description
[7:6]	RSRVD	-	-	N	Reserved.
[5]	STAT1_SHOOT_THRU_LIMIT	RW	0	Y	STATUS1 Output Shoot Through Current Limit. When STAT1_SHOOT_THRU_LIMIT is 1 then the transient current spikes are minimized, the performance of the STATUS1 output is degraded in this mode.
[4]	STAT0_SHOOT_THRU_LIMIT	RW	0	Y	STATUS0 Output Shoot Through Current Limit. When STAT0_SHOOT_THRU_LIMIT is 1 then the transient current spikes are minimized, the performance of the STATUS0 output is degraded in this mode.
[3:2]	RSRVD	RW	0x0	Y	Reserved.
[1]	STAT1_OPEND	RW	0	Y	STATUS1 Open Drain Enable. When STAT1_OPEND is 1 the STATUS1 output is configured as an open drain output driver.
[0]	STAT0_OPEND	RW	0	Y	STATUS0 Open Drain Enable. When STAT0_OPEND is 1 the STATUS0 output is configured as an open drain output driver.

10.6.18 MUTELVL1 Register; R20

The MUTELVL1 register determines the Output Driver during mute for output drivers 0 to 3.

Bit #	Field	Type	Reset	EEPROM	Description		
[7:6]	CH3_MUTE_LVL [1:0]	RW	0x1	Y	Channel 3 Output Driver Mute Level. CH3_MUTE_LVL determines the configuration of the CH3 Output Driver during mute as shown in the following table and is recommended to be set to 0x3. CH3_MUTE_LVL does not determine whether the CH3 driver is muted or not, instead this is determined by the CH_3_MUTE register bit.		
					CH3_MUTE_LVL	DIFF MODE	CMOS MODE
					0 (0x0)	CH3 Mute Bypass	CH3 Mute Bypass
					1 (0x1)	Powerdown, output goes to Vcm	Out_P Normal Operation, Out_N Force Output Low
					2 (0x2)	Force output High	Out_P Force Output Low, Out_N Normal Operation
					3 (0x3)	Force the positive output node to the internal regulator output voltage rail (when AC coupled to load) and the negative output node to the GND rail	Out_P Force Output Low, Out_N Force Output Low
[5:4]	CH2_MUTE_LVL [1:0]	RW	0x1	Y	Channel 2 Output Driver Mute Level. CH2_MUTE_LVL determines the configuration of the CH2 Output Driver during mute as shown in the following table and is recommended to be set to 0x3. CH2_MUTE_LVL does not determine whether the CH2 driver is muted or not, instead this is determined by the CH_2_MUTE register bit.		
					CH2_MUTE_LVL	DIFF MODE	CMOS MODE
					0 (0x0)	CH2 Mute Bypass	CH2 Mute Bypass
					1 (0x1)	Powerdown, output goes to Vcm	Out_P Normal Operation, Out_N Force Output Low
					2 (0x2)	Force output High	Out_P Force Output Low, Out_N Normal Operation
					3 (0x3)	Force the positive output node to the internal regulator output voltage rail (when AC coupled to load) and the negative output node to the GND rail	Out_P Force Output Low, Out_N Force Output Low
[3:2]	CH1_MUTE_LVL [1:0]	RW	0x1	Y	Channel 1 Output Driver Mute Level. CH1_MUTE_LVL determines the configuration of the CH1 Output Driver during mute as shown in the following table and is recommended to be set to 0x3. CH1_MUTE_LVL does not determine whether the CH1 driver is muted or not, instead this is determined by the CH_1_MUTE register bit.		
					CH1_MUTE_LVL	DIFF MODE	CMOS MODE
					0 (0x0)	CH1 Mute Bypass	CH1 Mute Bypass
					1 (0x1)	Powerdown, output goes to Vcm	Out_P Normal Operation, Out_N Force Output Low
					2 (0x2)	Force output High	Out_P Force Output Low, Out_N Normal Operation
					3 (0x3)	Force the positive output node to the internal regulator output voltage rail (when AC coupled to load) and the negative output node to the GND rail	Out_P Force Output Low, Out_N Force Output Low

Copyright © 2015–2016, Texas Instruments Incorporated

Bit #	Field	Type	Reset	EEPROM	Description		
[1:0]	CH0_MUTE_LVL [1:0]	RW	0x1	Y	Channel 0 Output Driver Mute Level. CH0_MUTE_LVL determines the configuration of the CH0 Output Driver during mute as shown in the following table and is recommended to be set to 0x3. CH0_MUTE_LVL does not determine whether the CH0 driver is muted or not, instead this is determined by the CH_0_MUTE register bit.		
					CH0_MUTE_LVL	DIFF MODE	CMOS MODE
					0 (0x0)	CH0 Mute Bypass	CH0 Mute Bypass
					1 (0x1)	Powerdown, output goes to Vcm	Out_P Normal Operation, Out_N Force Output Low
					2 (0x2)	Force output High	Out_P Force Output Low, Out_N Normal Operation
					3 (0x3)	Force the positive output node to the internal regulator output voltage rail (when AC coupled to load) and the negative output node to the GND rail	Out_P Force Output Low, Out_N Force Output Low

10.6.19 MUTELVL2 Register; R21

The MUTELVL2 register determines the Output Driver during mute for output drivers 4 to 7.

Bit #	Field	Type	Reset	EEPROM	Description		
[7:6]	CH7_MUTE_LVL[1:0]	RW	0x1	Y	Channel 7 Output Driver Mute Level. CH7_MUTE_LVL determines the configuration of the CH7 Output Driver during mute as shown in the following table and is recommended to be set to 0x3. CH7_MUTE_LVL does not determine whether the CH7 driver is muted or not, instead this is determined by the CH_7_MUTE register bit.		
					CH7_MUTE_LVL	DIFF MODE	CMOS MODE
					0 (0x0)	CH7 Mute Bypass	CH7 Mute Bypass
					1 (0x1)	Powerdown, output goes to Vcm	Out_P Normal Operation, Out_N Force Output Low
					2 (0x2)	Force output High	Out_P Force Output Low, Out_N Normal Operation
					3 (0x3)	Force the positive output node to the internal regulator output voltage rail (when AC coupled to load) and the negative output node to the GND rail	Out_P Force Output Low, Out_N Force Output Low
[5:4]	CH6_MUTE_LVL[1:0]	RW	0x1	Y	Channel 6 Output Driver Mute Level. CH6_MUTE_LVL determines the configuration of the CH6 Output Driver during mute as shown in the following table and is recommended to be set to 0x3. CH6_MUTE_LVL does not determine whether the CH6 driver is muted or not, instead this is determined by the CH_6_MUTE register bit.		
					CH6_MUTE_LVL	DIFF MODE	CMOS MODE
					0 (0x0)	CH6 Mute Bypass	CH6 Mute Bypass
					1 (0x1)	Powerdown, output goes to Vcm	Out_P Normal Operation, Out_N Force Input Low
					2 (0x2)	Force output High	Out_P Force Output Low, Out_N Normal Operation
					3 (0x3)	Force the positive output node to the internal regulator output voltage rail (when AC coupled to load) and the negative output node to the GND rail	Out_P Force Output Low, Out_N Force Output Low

Bit #	Field	Type	Reset	EEPROM	Description		
[3:2]	CH5_MUTE_LVL[1:0]	RW	0x1	Y	Channel 5 Output Driver Mute Level. CH5_MUTE_LVL determines the configuration of the CH5 Output Driver during mute as shown in the following table and is recommended to be set to 0x3. CH5_MUTE_LVL does not determine whether the CH5 driver is muted or not, instead this is determined by the CH_5_MUTE register bit.		
					CH5_MUTE_LVL	DIFF MODE	CMOS MODE
					0 (0x0)	CH5 Mute Bypass	CH5 Mute Bypass
					1 (0x1)	Powerdown, output goes to Vcm	Out_P Normal Operation, Out_N Force Output Low
					2 (0x2)	Force output High	Out_P Force Output Low, Out_N Normal Operation
					3 (0x3)	Force the positive output node to the internal regulator output voltage rail (when AC coupled to load) and the negative output node to the GND rail	Out_P Force Output Low, Out_N Force Output Low
[1:0]	CH4_MUTE_LVL[1:0]	RW	0x1	Y	Channel 4 Output Driver Mute Level. CH4_MUTE_LVL determines the configuration of the CH4 Output Driver during mute as shown in the following table and is recommended to be set to 0x3. CH4_MUTE_LVL does not determine whether the CH4 driver is muted or not, instead this is determined by the CH_4_MUTE register bit.		
					CH4_MUTE_LVL	DIFF MODE	CMOS MODE
					0 (0x0)	CH4 Mute Bypass	CH4 Mute Bypass
					1 (0x1)	Powerdown, output goes to Vcm	Out_P Normal Operation, Out_N Force Output Low
					2 (0x2)	Force output High	Out_P Force Output Low, Out_N Normal Operation
					3 (0x3)	Force the positive output node to the internal regulator output voltage rail (when AC coupled to load) and the negative output node to the GND rail	Out_P Force Output Low, Out_N Force Output Low

Copyright © 2015–2016, Texas Instruments Incorporated

10.6.20 OUT_MUTE Register; R22

Output Channel Mute Control

Bit #	Field	Type	Reset	EEPROM	Description
[7]	CH_7_MUTE	RW	1	Y	Channel 7 Mute Control. When CH_7_MUTE is set to 1 Output Channel 7 is automatically disabled when the selected clock source is invalid. When CH_7_MUTE_7 is 0 Channel 7 will continue to operate regardless of the state of the selected clock source.
[6]	CH_6_MUTE	RW	1	Y	Channel 6 Mute Control. When CH_6_MUTE is set to 1 Output Channel 6 is automatically disabled when the selected clock source is invalid. When CH_6_MUTE_6 is 0 Channel 6 will continue to operate regardless of the state of the selected clock source.
[5]	CH_5_MUTE	RW	1	Y	Channel 5 Mute Control. When CH_5_MUTE is set to 1 Output Channel 5 is automatically disabled when the selected clock source is invalid. When CH_5_MUTE_5 is 0 Channel 5 will continue to operate regardless of the state of the selected clock source.
[4]	CH_4_MUTE	RW	1	Y	Channel 4 Mute Control. When CH_4_MUTE is set to 1 Output Channel 4 is automatically disabled when the selected clock source is invalid. When CH_4_MUTE_4 is 0 Channel 4 will continue to operate regardless of the state of the selected clock source.
[3]	CH_3_MUTE	RW	1	Y	Channel 3 Mute Control. When CH_3_MUTE is set to 1 Output Channel 3 is automatically disabled when the selected clock source is invalid. When CH_3_MUTE is 0 Channel 3 will continue to operate regardless of the state of the selected clock source.
[2]	CH_2_MUTE	RW	1	Y	Channel 2 Mute Control. When CH_2_MUTE is set to 1 Output Channel 2 is automatically disabled when the selected clock source is invalid. When CH_2_MUTE is 0 Channel 2 will continue to operate regardless of the state of the selected clock source.
[1]	CH_1_MUTE	RW	1	Y	Channel 1 Mute Control. When CH_1_MUTE is set to 1 Output Channel 1 is automatically disabled when the selected clock source is invalid. When CH_1_MUTE is 0 Channel 1 will continue to operate regardless of the state of the selected clock source.
[0]	CH_0_MUTE	RW	1	Y	Channel 0 Mute Control. When CH_0_MUTE is set to 1 Output Channel 0 is automatically disabled when the selected clock source is invalid. When CH_0_MUTE is 0 Channel 0 will continue to operate regardless of the state of the selected clock source.

10.6.21 STATUS_MUTE Register; R23

Status CMOS Output Mute Control

Bit #	Field	Type	Reset	EEPROM	Description
[7:2]	RSRVD	-	-	N	Reserved.
[1]	STATUS1_MUTE	RW	1	Y	STATUS 1 Mute Control. When the STATUS1 output is configuted to provide a CMOS Clock and the STATUS1_MUTE bit is set to 1 then the STATUS1 Output is automatically disabled when the selected clock source is invalid. When STATUS1_MUTE is 0 the STATUS1 Output will continue to operate regardless of the state of the selected clock source. If the STATUS1 output is not configured to provide a Clock then it will continue to operate regardless of the STATUS1_MUTE bit value.
[0]	STATUS0_MUTE	RW	0	Y	STATUS 0 Mute Control. When the STATUS0 output is configuted to provide a CMOS Clock and the STATUS0_MUTE bit is set to 1 then the STATUS0 Output is automatically disabled when the selected clock source is invalid. When STATUS0_MUTE is 0 the STATUS0 Output will continue to operate regardless of the state of the selected clock source. If the STATUS0 output is not configured to provide a Clock then it will continue to operate regardless of the STATUS0_MUTE bit value.

10.6.22 DYN_DLY Register; R24

Output Divider Dynamic Delay Control

Bit #	Field	Type	Reset	EEPROM	Description
[7:6]	RSRVD	-	-	N	Reserved.
[5]	DIV_7_DYN_DLY	RW	0	Y	Channel 7 Divider Dynamic Delay Control. Enables coarse frequency margining for divide value > 8
[4]	DIV_6_DYN_DLY	RW	0	Y	Channel 6 Divider Dynamic Delay Control. Enables coarse frequency margining for divide value > 8
[3]	DIV_5_DYN_DLY	RW	0	Y	Channel 5 Divider Dynamic Delay Control. Enables coarse frequency margining for divide value > 8
[2]	DIV_4_DYN_DLY	RW	0	Y	Channel 4 Divider Dynamic Delay Control. Enables coarse frequency margining for divide value > 8
[1]	DIV_23_DYN_DLY	RW	0	Y	Channel 23 Divider Dynamic Delay Control. Enables coarse frequency margining for divide value > 8
[0]	DIV_01_DYN_DLY	RW	0	Y	Channel 01 Divider Dynamic Delay Control. Enables coarse frequency margining for divide value > 8

Copyright © 2015–2016, Texas Instruments Incorporated

10.6.23 REFDETCTL Register; R25

The REFDETCTL register provides control over input reference clock detect features.

Bit #	Field	Type	Reset	EEPROM	Description	
[7:6]	DETECT_MODE_SEC[1:0]	RW	0x1	Y	Secondary Input Energy Detector Mode Control. The DETECT_MODE_SEC field determines the method for Energy Detection on a single-ended signal on the Secondary Input as follows. When rising and/or falling slew rate detector is enabled, the reference input should meet the following conditions for correct operation: V_{IH} < 1.7 V and V_{IL} > 0.2 V. When VIH/VIL level detector is enabled, the reference input should meet the following conditions for correct operation: V_{IH} < 1.5 V and V_{IL} > 0.4 V.	
					DETECT_MODE_SEC	Energy Detection Method
					0 (0x0)	Rising Slew Rate Detector
					1 (0x1)	Rising and Falling Slew Rate Detector
					2 (0x2)	Falling Slew Rate Detector
					3 (0x3)	VIH/VIL Level Detector
[5:4]	DETECT_MODE_PRI[1:0]	RW	0x1	Y	Primary Input Energy Detector Mode Control. The DETECT_MODE_PRI field determines the method for Energy Detection on a single-ended signal on the Primary Input as follows. When rising and/or falling slew rate detector is enabled, the reference input should meet the following conditions for correct operation: V_{IH} < 1.7 V and V_{IL} > 0.2 V. When VIH/VIL level detector is enabled, the reference input should meet the following conditions for correct operation: V_{IH} < 1.5 V and V_{IL} > 0.4 V.	
					DETECT_MODE_PRI	Energy Detection Method
					0 (0x0)	Rising Slew Rate Detector
					1 (0x1)	Rising and Falling Slew Rate Detector
					2 (0x2)	Falling Slew Rate Detector
					3 (0x3)	VIH/VIL Level Detector
[3:2]	LVL_SEL_SEC[1:0]	RW	0x1	Y	Secondary Input Comparator Level Selection. The LVL_SEL_SEC fields determines the levels on a differential signal for the Secondary Input Energy Detection block as follows.	
					LVL_SEL_SEC	Comparator Levels
					0 (0x0)	200 mV Differential
					1 (0x1)	300 mV Differential
					2 (0x2)	400 mV Differential
					3 (0x3)	RESERVED
[1:0]	LVL_SEL_PRI[1:0]	RW	0x1	Y	Primary Input Comparator Level Selection. The LVL_SEL_PRI field determines the levels on a differential signal for the Primary Input Energy Detection block as follows.	
					LVL_SEL_PRI	Comparator Levels
					0 (0x0)	200 mV Differential
					1 (0x1)	300 mV Differential
					2 (0x2)	400 mV Differential
					3 (0x3)	RESERVED

10.6.24 STAT0_INT Register; R27

The STAT0_INT register provides control of the STATUS0 output and Interrupt configuration. The STATUS0 pin is also used for test and diagnostic functions. The test configuration registers override the STAT0_INT register.

Bit #	Field	Type	Reset	EEPROM	Description	
[7:4]	STAT0_SEL[3:0]	RW	0x5	Y	STATUS0 Indicator Signal Select.	
					STAT0CFG	STATUS0 Information
					0 (0x0)	PRIREF Loss of Signal (LOS)
					1 (0x1)	SECREF Loss of Signal (LOS)
					2 (0x2)	PLL Loss of Lock (LOL)
					3 (0x3)	PLL R Divider, divided by 2 (when R Divider is not bypassed)
					4 (0x4)	PLL N Divider, divided by 2
					5 (0x5)	Reserved
					6 (0x6)	Reserved
					7 (0x7)	Reserved
					8 (0x8)	PLL VCO Calibration Active (CAL)
					9 (0x9)	Reserved
					10 (0xA)	Interrupt (INTR). Derived from INT_FLAG register bits.
					11 (0xB)	PLL M Divider, divided by 2 (when M Divider is not bypassed)
					12 (0xC)	Reserved
					13 (0xD)	EEPROM Active
					14 (0xE)	PLL Secondary to Primary Switch in Automatic Mode
					15 (0xF)	Reserved
					The polarity of STATUS0 is set by the STAT0POL bit.	

Copyright © 2015–2016, Texas Instruments Incorporated

Bit #	Field	Type	Reset	EEPROM	Description
[3]	STAT0_POL	RW	1	Y	STATUS0 Output Polarity. The STAT0_POL bit defines the polarity of information presented on the STATUS0 output. If STAT0_POL is set to 1 then STATUS0 is active high, if STAT0_POL is 0 then STATUS0 is active low.
[2:0]	RSRVD	-	-	N	Reserved.

10.6.25 STAT1 Register; R28

The STAT1_INT register provides control of the STATUS1 output. The STATUS1 pin is also used for test and diagnostic functions. The test configuration registers override the STAT0 register.

Bit #	Field	Type	Reset	EEPROM	Description	
[7:4]	STAT1_SEL[3:0]	RW	0x2	Y	STATUS1 Indicator Signal Select. The STAT1_SEL field determines what information is presented on the STATUS1 output as follows.	
					STAT1CFG	STATUS1 Information
					0 (0x0)	PRIREF Loss of Signal (LOS)
					1 (0x1)	SECREF Loss of Signal (LOS)
					2 (0x2)	PLL Loss of Lock (LOL)
					3 (0x3)	PLL R Divider, divided by 2 (when R Divider is not bypassed)
					4 (0x4)	PLL N Divider, divided by 2
					5 (0x5)	Reserved
					6 (0x6)	Reserved
					7 (0x7)	Reserved
					8 (0x8)	PLL VCO Calibration Active (CAL)
					9 (0x9)	Reserved
					10 (0xA)	Interrupt (INTR)
					11 (0xB)	PLL M Divider, divided by 2 (when M Divider is not bypassed)
					12 (0xC)	Reserved
					13 (0xD)	EEPROM Active
					14 (0xE)	PLL Secondary to Primary Switch in Automatic Mode
					15 (0xF)	Reserved
					The polarity of STATUS1 is set by the STAT1POL bit.	
[3]	STAT1_POL	RW	1	Y	STATUS1 Output Polarity. The STAT1_POL bit defines the polarity of information presented on the STATUS1 output. If STAT1_POL is set to 1 then STATUS1 is active high, if STAT1_POL is 0 then STATUS1 is active low.	
[2:0]	RSRVD	-	-	N	Reserved.	

10.6.26 OSCCTL1 Register; R29

The OSCCTL1 register provides control over input reference clock features.

Bit #	Field	Type	Reset	EEPROM	Description
[7]	DETECT_BYP	RW	0	Y	Signal Detector Bypass. When DETECT_BYP is 1 the output of the Signal Detector's, both Primary and Secondary are ingored and the inputs are always considered to be valid by the PLL control state machines. The DETECT_BYP bit has no effect on the Interrupt register or STATUS output's.
[6]	RSRVD	-	-	N	Reserved.
[5]	TERM2GND_SEC	RW	0	Y	Differential Termination to GND Control for Secondary Input. When TERM2GND_SEC is 1 an internal 50 Ω termination to GND is selected on the Secondary input in differential mode.
[4]	TERM2GND_PRI	RW	0	Y	Differential Termination to GND Control for Primary Input. When TERM2GND_PRI is 1 an internal 50 Ω termination to GND is selected on the Primary input in differential mode.
[3]	DIFFTERM_SEC	RW	0	Y	Differential Termination Control for Secondary Input. When DIFFTERM_SEC is 1 an internal 100 Ω termination is selected on the Secondary input in differential mode.
[2]	DIFFTERM_PRI	RW	1	Y	Differential Termination Control for Primary Input. When DIFFTERM_PRI is 1 an internal 100 Ω termination is selected on the Primary input in differential mode.
[1]	AC_MODE_SEC	RW	1	Y	AC Coupling Mode for Secondary Input. When AC_MODE_SEC is 1, this enables the internal input biasing to support an externally AC coupled input signal on the SECREF inputs. When AC_MODE_SEC is 0, the internal input bias is not used.
[0]	AC_MODE_PRI	RW	0	Y	AC Coupling Mode for Primary Input. When AC_MODE_PRI is 1, this enables the internal input biasing to support an externally AC coupled input signal on the PRIREF inputs. When AC_MODE_PRI is 0, the internal input bias is not used.

10.6.27 PWDN Register; R30

The PWDN register is described in the following table.

Bit #	Field	Type	Reset	EEPROM	Description
[7]	RSRVD	-	-	N	Reserved.
[6]	CMOSCHPWDN	RW	0	Y	CMOS Output Channel Powerdown.
[5]	CH7PWDN	RW	0	Y	Output Channel 7 Powerdown. When CH7PWDN is 1, the MUX and divider of channel 7 will be disabled. To shut down entire output path (output MUX, divider and buffer), R43[5:4] should be set to 0x0 irrespective of R30.5.
[4]	CH6PWDN	RW	0	Y	Output Channel 6 Powerdown. When CH6PWDN is 1, the MUX and divider of channel 6 will be disabled. To shut down entire output path (output MUX, divider and buffer), R41[5:4] should be set to 0x0 irrespective of R30.4.
[3]	CH5PWDN	RW	0	Y	Output Channel 5 Powerdown. When CH5PWDN is 1, the MUX and divider of channel 5 will be disabled. To shut down entire output path (output MUX, divider and buffer), R39[5:4] should be set to 0x0 irrespective of R30.3.
[2]	CH4PWDN	RW	0	Y	Output Channel 4 Powerdown. When CH4PWDN is 1, the MUX and divider of channel 4 will be disabled. To shut down entire output path (output MUX, divider and buffer), R37[5:4] should be set to 0x0 irrespective of R30.2.
[1]	CH23PWDN	RW	0	Y	Output Channel 23 Powerdown. When CH23PWDN is 1, the MUX and divider of channels 2 and 3 will be disabled. To shut down entire output paths (output MUX, divider and buffers), R35[6:5] and R34[6:5] should be set to 0x0 irrespective of R30.1.
[0]	CH01PWDN	RW	0	Y	Output Channel 01 Powerdown. When CH01PWDN is 1, the MUX and divider of channels 0 and 1 will be disabled. To shut down entire output paths (output MUX, divider and buffers), R32[6:5] and R31[6:5] should be set to 0x0 irrespective of R30.0.

Copyright © 2015–2016, Texas Instruments Incorporated

10.6.28 OUTCTL_0 Register; R31

The OUTCTL_0 register provides control over Output 0.

Bit #	Field	Type	Reset	EEPROM	Description		
[7]	RSRVD	RW	1	Y	Reserved. It is recommended to be set to "0".		
[6:5]	OUT_0_SEL[1:0]	RW	0x1	Y	Channel 0 Output Driver Format Select. The OUT_0_SEL field controls the Channel 0 Output Driver as shown below.		
					OUT_0_SEL		OUTPUT OPERATION
					0 (0x0)		Disabled
					1 (0x1)		AC-LVDS/AC-CML/AC-LVPECL
					2 (0x2)		HCSL
					3 (0x3)		LVCMOS
[4:3]	OUT_0_MODE1[1:0]	RW	0x2	Y	Channel 0 Output Driver Mode1 Select.		
					OUT_0_MODE1	Diff-Mode, Itail	CMOS-Mode, Out_P
					0 (0x0)	4 mA (AC-LVDS)	Powerdown, tristate
					1 (0x1)	6 mA (AC-CML)	Powerdown, low
					2 (0x2)	8 mA (AC-LVPECL)	Powerup, negative polarity
					3 (0x3)	16 mA (HCSL) or 8 mA (AC-LVPECL)	Powerup, positive polarity
[2:1]	OUT_0_MODE2[1:0]	RW	0x0	Y	Channel 0 Output Driver Mode2 Select.		
					OUT_0_MODE2	Diff-Mode, R_{LOAD} in HCSL mode	CMOS=Mode, Out_N
					0 (0x0)	Tristate	Powerdown, tristate
					1 (0x1)	50 Ω	Powerdown, low
					2 (0x2)	100 Ω	Powerup, negative polarity
					3 (0x3)	200 Ω	Powerup, positive polarity
[0]	RSRVD	-	-	N	Reserved.		

10.6.29 OUTCTL_1 Register; R32

The OUTCTL_1 register provides control over Output 1.

Bit #	Field	Type	Reset	EEPROM	Description		
[7]	RSRVD	-	-	N	Reserved.		
[6:5]	OUT_1_SEL[1:0]	RW	0x1	Y	Channel 1 Output Driver Format Select. The OUT_1_SEL field controls the Channel 1 Output Driver as shown below.		
					OUT_1_SEL		OUTPUT OPERATION
					0 (0x0)		Disabled
					1 (0x1)		AC-LVDS/AC-CML/AC-LVPECL
					2 (0x2)		HCSL
					3 (0x3)		LVCMOS
[4:3]	OUT_1_MODE1[1:0]	RW	0x2	Y	Channel 1 Output Driver Mode1 Select.		
					OUT_1_MODE1	Diff-Mode, Itail	CMOS-Mode, Out_P
					0 (0x0)	4 mA (AC-LVDS)	Powerdown, tristate
					1 (0x1)	6 mA (AC-CML)	Powerdown, low
					2 (0x2)	8 mA (AC-LVPECL)	Powerup, negative polarity
					3 (0x3)	16 mA (HCSL) or 8 mA (AC-LVPECL)	Powerup, positive polarity
[2:1]	OUT_1_MODE2[1:0]	RW	0x0	Y	Channel 1 Output Driver Mode2 Select.		
					OUT_1_MODE2	Diff-Mode, Rload in HCSL mode	CMOS=Mode, Out_N
					0 (0x0)	Tristate	Powerdown, tristate
					1 (0x1)	50 Ω	Powerdown, low
					2 (0x2)	100 Ω	Powerup, negative polarity
					3 (0x3)	200 Ω	Powerup, positive polarity
[0]	RSRVD	-	-	N	Reserved.		

10.6.30 OUTDIV_0_1 Register; R33

Channel [1:0] Output Divider

Bit #	Field	Type	Reset	EEPROM	Description	
[7:0]	OUT_0_1_DIV [7:0]	RW	0x01	Y	Channel's 0 and 1 Output Divider. The Channel 0 and 1 Divider, OUT_0_1_DIV, is a 8-bit divider. The valid values for OUT_0_1_DIV range from 1 to 256 as shown below.	
					OUT_0_1_DIV	DIVIDE RATIO
					0 (0x00)	1
					1 (0x01)	2
					2 (0x02)	3
					...	
					255 (0xFF)	256

10.6.31 OUTCTL_2 Register; R34

The OUTCTL_2 register provides control over Output 2.

Bit #	Field	Type	Reset	EEPROM	Description		
[7]	RSRVD	RW	1	Y	Reserved. It is recommended to be set to 0.		
[6:5]	OUT_2_SEL[1:0]	RW	0x1	Y	Channel 2 Output Driver Format Select. The OUT_2_SEL field controls the Channel 2 Output Driver as shown below.		
					OUT_2_SEL		OUTPUT OPERATION
					0 (0x0)		Disabled
					1 (0x1)		AC-LVDS/AC-CML/AC-LVPECL
					2 (0x2)		HCSL
					3 (0x3)		LVCMOS
[4:3]	OUT_2_MODE1[1:0]	RW	0x2	Y	Channel 2 Output Driver Mode1 Select.		
					OUT_2_MODE1	Diff-Mode, Itail	CMOS-Mode, Out_P
					0 (0x0)	4 mA (AC-LVDS)	Powerdown, tristate
					1 (0x1)	6 mA (AC-CML)	Powerdown, low
					2 (0x2)	8 mA (AC-LVPECL)	Powerup, negative polarity
					3 (0x3)	16 mA (HCSL) or 8 mA (AC-LVPECL)	Powerup, positive polarity
[2:1]	OUT_2_MODE2[1:0]	RW	0x0	Y	Channel 2 Output Driver Mode2 Select.		
					OUT_2_MODE2	Diff-Mode, Rload in HCSL mode	CMOS=Mode, Out_N
					0 (0x0)	Tristate	Powerdown, tristate
					1 (0x1)	50 Ω	Powerdown, low
					2 (0x2)	100 Ω	Powerup, negative polarity
					3 (0x3)	200 Ω	Powerup, positive polarity
[0]	RSRVD	-	-	N	Reserved.		

Copyright © 2015–2016, Texas Instruments Incorporated

10.6.32 OUTCTL_3 Register; R35

The OUTCTL_3 register provides control over Output 3.

Bit #	Field	Type	Reset	EEPROM	Description		
[7]	RSRVD	-	-	N	Reserved.		
[6:5]	OUT_3_SEL[1:0]	RW	0x1	Y	Channel 3 Output Driver Format Select. The OUT_3_SEL field controls the Channel 3 Output Driver as shown below.		
					OUT_3_SEL		OUTPUT OPERATION
					0 (0x0)		Disabled
					1 (0x1)		AC-LVDS/AC-CML/AC-LVPECL
					2 (0x2)		HCSL
					3 (0x3)		LVCMOS
[4:3]	OUT_3_MODE1[1:0]	RW	0x2	Y	Channel 3 Output Driver Mode1 Select.		
					OUT_3_MODE1	Diff-Mode, Itail	CMOS-Mode, Out_P
					0 (0x0)	4 mA (AC-LVDS)	Powerdown, tristate
					1 (0x1)	6 mA (AC-CML)	Powerdown, low
					2 (0x2)	8 mA (AC-LVPECL)	Powerup, negative polarity
					3 (0x3)	16 mA (HCSL) or 8 mA (AC-LVPECL)	Powerup, positive polarity
[2:1]	OUT_3_MODE2[1:0]	RW	0x0	Y	Channel 3 Output Driver Mode2 Select.		
					OUT_3_MODE2	Diff-Mode, Rload in HCSL mode	CMOS=Mode, Out_N
					0 (0x0)	Tristate	Powerdown, tristate
					1 (0x1)	50 Ω	Powerdown, low
					2 (0x2)	100 Ω	Powerup, negative polarity
					3 (0x3)	200 Ω	Powerup, positive polarity
[0]	RSRVD	-	-	N	Reserved.		

10.6.33 OUTDIV_2_3 Register; R36

Channel [3:2] Output Divider

Bit #	Field	Type	Reset	EEPROM	Description	
[7:0]	OUT_2_3_DIV[7:0]	RW	0x03	Y	Channel's 2 and 3 Output Divider. The Channel 2 and 3 Divider, OUT_2_3_DIV, is a 8-bit divider. The valid values for OUT_2_3_DIV range from 1 to 256 as shown below.	
					OUT_2_3_DIV	DIVIDE RATIO
					0 (0x00)	1
					1 (0x01)	2
					2 (0x02)	3
					...	
					255 (0xFF)	256

10.6.34 OUTCTL_4 Register; R37

The OUTCTL_4 register provides control over Output 4

Bit #	Field	Type	Reset	EEPROM	Description		
[7:6]	CH_4_MUX[1:0]	RW	0x0	Y	Channel 4 Clock Source Mux Control.		
					CH_4_MUX		CH4 Clock Source
					0 (0x0)		PLL
					1 (0x1)		Reserved
					2 (0x2)		PRIMARY REFERENCE
					3 (0x3)		SECONDARY REFERENCE
					When the doubler is enabled the Primary and Secondary Reference options will reflect the frequency doubled reference. If the Primary or Secondary Reference options are selected the output divider is by-passed.		
[5:4]	OUT_4_SEL[1:0]	RW	0x1	Y	Channel 4 Output Driver Format Select. The OUT_4_SEL field controls the Channel 4 Output Driver as shown below.		
					OUT_1_SEL		OUTPUT OPERATION
					0 (0x0)		Disabled
					1 (0x1)		AC-LVDS/AC-CML/AC-LVPECL
					2 (0x2)		HCSL
					3 (0x3)		LVCMOS
[3:2]	OUT_4_MODE1[1:0]	RW	0x2	Y	Channel 4 Output Driver Mode1 Select.		
					OUT_4_MODE1	Diff-Mode, Itail	CMOS-Mode, Out_P
					0 (0x0)	4 mA (AC-LVDS)	Powerdown, tristate
					1 (0x1)	6 mA (AC-CML)	Powerdown, low
					2 (0x2)	8 mA (AC-LVPECL)	Powerup, negative polarity
					3 (0x3)	16 mA (HCSL) or 8 mA (AC-LVPECL)	Powerup, positive polarity
[1:0]	OUT_4_MODE2[1:0]	RW	0x0	Y	Channel 4 Output Driver Mode2 Select.		
					OUT_4_MODE2	Diff-Mode, Rload in HCSL mode	CMOS=Mode, Out_N
					0 (0x0)	Tristate	Powerdown, tristate
					1 (0x1)	50 Ω	Powerdown, low
					2 (0x2)	100 Ω	Powerup, negative polarity
					3 (0x3)	200 Ω	Powerup, positive polarity

10.6.35 OUTDIV_4 Register; R38

Channel 4 Output Divider

Bit #	Field	Type	Reset	EEPROM	Description	
[7:0]	OUT_4_DIV[7:0]	RW	0x02	Y	Channel 4 Output Divider. The Channel 4 Divider, OUT_4_DIV, is a 8-bit divider. The valid values for OUT_4_DIV range from 1 to 256 as shown below. The divider only operates on Channel 4 when the clock source is PLL or PLL2.	
					OUT_4_DIV	DIVIDE RATIO
					0 (0x00)	1
					1 (0x01)	2
					2 (0x02)	3
					...	
					255 (0xFF)	256

Copyright © 2015–2016, Texas Instruments Incorporated

10.6.36 OUTCTL_5 Register; R39

The OUTCTL_5 register provides control over Output 5.

Bit #	Field	Type	Reset	EEPROM	Description		
[7:6]	CH_5_MUX[1:0]	RW	0x0	Y	Channel 5 Clock Source Mux Control.		
					CH_5_MUX		CH5 Clock Source
					0 (0x0)		PLL
					1 (0x1)		Reserved
					2 (0x2)		PRIMARY REFERENCE
					3 (0x3)		SECONDARY REFERENCE
					When the doubler is enabled the Primary and Secondary Reference options will reflect the frequency doubled reference. If the Primary or Secondary Reference options are selected the output divider is by-passed.		
[5:4]	OUT_5_SEL[1:0]	RW	0x1	Y	Channel 5 Output Driver Format Select. The OUT_5_SEL field controls the Channel 5 Output Driver as shown below.		
					OUT_1_SEL		OUTPUT OPERATION
					0 (0x0)		Disabled
					1 (0x1)		AC-LVDS/AC-CML/AC-LVPECL
					2 (0x2)		HCSL
					3 (0x3)		LVCMOS
[3:2]	OUT_5_MODE1[1:0]	RW	0x2	Y	Channel 5 Output Driver Mode1 Select.		
					OUT_5_MODE1	Diff-Mode, Itail	CMOS-Mode, Out_P
					0 (0x0)	4 mA (AC-LVDS)	Powerdown, tristate
					1 (0x1)	6 mA (AC-CML)	Powerdown, low
					2 (0x2)	8 mA (AC-LVPECL)	Powerup, negative polarity
					3 (0x3)	16 mA (HCSL) or 8 mA (AC-LVPECL)	Powerup, positive polarity
[1:0]	OUT_5_MODE2[1:0]	RW	0x0	Y	Channel 5 Output Driver Mode2 Select.		
					OUT_5_MODE2	Diff-Mode, Rload in HCSL mode	CMOS=Mode, Out_N
					0 (0x0)	Tristate	Powerdown, tristate
					1 (0x1)	50 Ω	Powerdown, low
					2 (0x2)	100 Ω	Powerup, negative polarity
					3 (0x3)	200 Ω	Powerup, positive polarity

10.6.37 OUTDIV_5 Register; R40

Channel 5 Output Divider

Bit #	Field	Type	Reset	EEPROM	Description	
[7:0]	OUT_5_DIV[7:0]	RW	0x02	Y	Channel 5 Output Divider. The Channel 5 Divider, OUT_5_DIV, is a 8-bit divider. The valid values for OUT_5_DIV range from 1 to 256 as shown below. The divider only operates on Channel 5 when the clock source is PLL or PLL2.	
					OUT_5_DIV	DIVIDE RATIO
					0 (0x00)	1
					1 (0x01)	2
					2 (0x02)	3
					...	
					255 (0xFF)	256

10.6.38 OUTCTL_6 Register; R41

The OUTCTL_6 register provides control over Output 6.

Bit #	Field	Type	Reset	EEPROM	Description		
[7:6]	CH_6_MUX[1:0]	RW	0x0	Y	Channel 6 Clock Source Mux Control.		
					CH_6_MUX		CH6 Clock Source
					0 (0x0)		PLL
					1 (0x1)		Reserved
					2 (0x2)		PRIMARY REFERENCE
					3 (0x3)		SECONDARY REFERENCE
					When the doubler is enabled the Primary and Secondary Reference options will reflect the frequency doubled reference. If the Primary or Secondary Reference options are selected the output divider is by-passed.		
[5:4]	OUT_6_SEL[1:0]	RW	0x1	Y	Channel 6 Output Driver Format Select. The OUT_6_SEL field controls the Channel 6 Output Driver as shown below.		
					OUT_1_SEL		OUTPUT OPERATION
					0 (0x0)		Disabled
					1 (0x1)		AC-LVDS/AC-CML/AC-LVPECL
					2 (0x2)		HCSL
					3 (0x3)		LVCMOS
[3:2]	OUT_6_MODE1[1:0]	RW	0x2	Y	Channel 6 Output Driver Mode1 Select.		
					OUT_6_MODE1	Diff-Mode, Itail	CMOS-Mode, Out_P
					0 (0x0)	4 mA (AC-LVDS)	Powerdown, tristate
					1 (0x1)	6 mA (AC-CML)	Powerdown, low
					2 (0x2)	8 mA (AC-LVPECL)	Powerup, negative polarity
					3 (0x3)	16 mA (HCSL) or 8 mA (AC-LVPECL)	Powerup, positive polarity
[1:0]	OUT_6_MODE2[1:0]	RW	0x0	Y	Channel 6 Output Driver Mode2 Select.		
					OUT_6_MODE2	Diff-Mode, Rload in HCSL mode	CMOS=Mode, Out_N
					0 (0x0)	Tristate	Powerdown, tristate
					1 (0x1)	50 Ω	Powerdown, low
					2 (0x2)	100 Ω	Powerup, negative polarity
					3 (0x3)	200 Ω	Powerup, positive polarity

10.6.39 OUTDIV_6 Register; R42

Channel 6 Output Divider

Bit #	Field	Type	Reset	EEPROM	Description	
[7:0]	OUT_6_DIV[7:0]	RW	0x05	Y	Channel 6 Output Divider. The Channel 6 Divider, OUT_6_DIV, is a 8-bit divider. The valid values for OUT_6_DIV range from 1 to 256 as shown below. The divider only operates on Channel 6 when the clock source is PLL or PLL2.	
					OUT_6_DIV	DIVIDE RATIO
					0 (0x00)	1
					1 (0x01)	2
					2 (0x02)	3
					...	
					255 (0xFF)	256

Copyright © 2015–2016, Texas Instruments Incorporated

10.6.40 OUTCTL_7 Register; R43

The OUTCTL_7 register provides control over Output 7.

Bit #	Field	Type	Reset	EEPROM	Description		
[7:6]	CH_7_MUX[1:0]	RW	0x0	Y	Channel 7 Clock Source Mux Control.		
					CH_7_MUX		CH7 Clock Source
					0 (0x0)		PLL
					1 (0x1)		Reserved
					2 (0x2)		PRIMARY REFERENCE
					3 (0x3)		SECONDARY REFERENCE
					When the doubler is enabled the Primary and Secondary Reference options will reflect the frequency doubled reference. If the Primary or Secondary Reference options are selected the output divider is by-passed.		
[5:4]	OUT_7_SEL[1:0]	RW	0x1	Y	Channel 7 Output Driver Format Select. The OUT_7_SEL field controls the Channel 7 Output Driver as shown below.		
					OUT_1_SEL		OUTPUT OPERATION
					0 (0x0)		Disabled
					1 (0x1)		AC-LVDS/AC-CML/AC-LVPECL
					2 (0x2)		HCSL
					3 (0x3)		LVCMOS
[3:2]	OUT_7_MODE1[1:0]	RW	0x2	Y	Channel 7 Output Driver Mode1 Select.		
					OUT_7_MODE1	Diff-Mode, Itail	CMOS-Mode, Out_P
					0 (0x0)	4 mA (AC-LVDS)	Powerdown, tristate
					1 (0x1)	6 mA (AC-CML)	Powerdown, low
					2 (0x2)	8 mA (AC-LVPECL)	Powerup, negative polarity
					3 (0x3)	16 mA (HCSL) or 8 mA (AC-LVPECL)	Powerup, positive polarity
[1:0]	OUT_7_MODE2[1:0]	RW	0x0	Y	Channel 7 Output Driver Mode2 Select.		
					OUT_7_MODE2	Diff-Mode, Rload in HCSL mode	CMOS=Mode, Out_N
					0 (0x0)	Tristate	Powerdown, tristate
					1 (0x1)	50 Ω	Powerdown, low
					2 (0x2)	100 Ω	Powerup, negative polarity
					3 (0x3)	200 Ω	Powerup, positive polarity

10.6.41 OUTDIV_7 Register; R44

Channel 7 Output Divider

Bit #	Field	Type	Reset	EEPROM	Description	
[7:0]	OUT_7_DIV[7:0]	RW	0x05	Y	Channel 7 Output Divider. The Channel 7 Divider, OUT_7_DIV, is a 8-bit divider. The valid values for OUT_7_DIV range from 1 to 256 as shown below. The divider only operates on Channel 7 when the clock source is PLL or PLL2.	
					OUT_7_DIV	DIVIDE RATIO
					0 (0x00)	1
					1 (0x01)	2
					2 (0x02)	3
					...	
					255 (0xFF)	256

10.6.42 CMOSDIVCTRL Register; R45

CMOS Output Divider Control. The CMOS Clock Outputs provided on STATUS0 and STATUS1 can come from either CMOS Divider0 or CMOS Divider1. Additionally the clock source routed to the CMOS Dividers can come from either the PLL LVCMOS Pre-Divider or the PLL2 LVCMOS Pre-Divider.

Bit #	Field	Type	Reset	EEPROM	Description	
[7:6]	RSRVD	RW	0x0	Y	Reserved.	
[5:4]	PLLCMOSPREDIV[1:0]	RW	0x0	Y	PLL LVCMOS Pre-Divider Selection. The PLLCMOSPREDIV field selects the divider value for the PLL pre-divider that drives the CMOS Dividers.	
					PLLCMOSPREDIV	Divider Value
					0 (0x0)	Disabled
					1 (0x1)	4
					2 (0x2)	5
					3 (0x3)	Reserved
[3:2]	STATUS1MUX[1:0]	RW	0x2	Y	STATUS1 Mux Selection. The STATUS1MUX field controls the signal source for the STATUS1 Pin as described below.	
					STATUS1MUX	STATUS1 OPERATION
					0 (0x0)	LVCMOS Clock, from STATUS0 Divider
					1 (0x1)	LVCMOS Clock, from STATUS1 Divider
					2 (0x2)	Normal Status Operation
					3 (0x3)	STATUS1 Disabled
[1:0]	STATUS0MUX[1:0]	RW	0x2	Y	STATUS0 Mux Selection. The STATUS0MUX field controls the signal source for the STATUS0 Pin as described below.	
					STATUS0MUX	STATUS0 OPERATION
					0 (0x0)	LVCMOS Clock, from STATUS0 Divider
					1 (0x1)	LVCMOS Clock, from STATUS1 Divider
					2 (0x2)	Normal Status Operation
					3 (0x3)	STATUS0 Disabled

10.6.43 CMOSDIV0 Register; R46

CMOS Output Divider 0

Bit #	Field	Type	Reset	EEPROM	Description	
[7:0]	CMOSDIV0[7:0]	RW	0x00	Y	CMOS Output Divider 0. The CMOS Divider0, CMOSDIV0, is a 8-bit divider that divides the clock source from the PLL LVCMOS Pre-Divider output. The valid values for CMOSDIV0 range from 1 to 256 as shown below.	
					CMOSDIV0	DIVIDE RATIO
					0 (0x00)	Disabled
					1 (0x01), 2 (0x02), 3 (0x03), 4 (0x04), 5 (0x05)	6
					6 (0x06)	7
					7 (0x07)	8
					...	
					255 (0xFF)	256

Copyright © 2015–2016, Texas Instruments Incorporated

10.6.44 STATUS_SLEW Register; R49

Status CMOS Output Slew Control

Bit #	Field	Type	Reset	EEPROM	Description	
[7:4]	RSRVD	-	-	N	Reserved.	
[3:2]	STATUS1SLEW[1:0]	RW	0x0	Y	STATUS1 Slew Control. The STATUS1SLEW field controls the slew rate of the STATUS1 output as shown below.	
					STATUS1SLEW	STATUS1 Rise/Fall Time
					0 (0x0)	Fast (0.35 ns)
					1 (0x1)	RESERVED
					2 (0x2)	Slow (2.1 ns)
					3 (0x3)	RESERVED
[1:0]	STATUS0SLEW[1:0]	RW	0x0	Y	STATUS0 Slew Control. The STATUS0SLEW field controls the slew rate of the STATUS0 output as shown below.	
					STATUS0SLEW	STATUS0 Rise/Fall Time
					0 (0x0)	Fast (0.35 ns)
					1 (0x1)	RESERVED
					2 (0x2)	Slow (2.1 ns)
					3 (0x3)	RESERVED

10.6.45 IPCLKSEL Register; R50

Input Clock Select

Bit #	Field	Type	Reset	EEPROM	Description	
[7:6]	SECBUFSEL[1:0]	RW	0x2	Y	Secondary Input Buffer Selection. SECBUFSEL configures the Secondary Input Buffer as follows.	
					SECBUFSEL	Mode
					0 (0x0)	Single-ended Input
					1 (0x1)	Differential Input
					2 (0x2)	Crystal Input
					3 (0x3)	Disabled
[5:4]	PRIBUFSEL[1:0]	RW	0x1	Y	Primary Input Buffer Selection. PRIBUFSEL configures the Primary Input Buffer as follows.	
					PRIBUFSEL	Mode
					0 (0x0)	Single-ended Input
					1 (0x1)	Differential Input
					2 (0x2)	Disabled
					3 (0x3)	Disabled
[3:2]	RSRVD	RW	0x1	Y	Reserved.	
[1:0]	INSEL_PLL[1:0]	RW	0x1	Y	Reference Input Selection for PLL. INSEL_PLL Determines the input select for PLL as follows.	
					INSEL_PLL	Input Mode
					0 (0x0)	Automatic, Primary is preferred.
					1 (0x1)	Determined by external pin, REFSEL.
					2 (0x2)	Primary Input Selected.
					3 (0x3)	Secondary Input Selected.
					When INSEL_PLL is equal to b01 the REFSEL pin determines the reference clock source for PLL as follows.	
					REFSEL	PLL Reference Clock
					0	PLL Reference is Primary input
					V_{IM}	PLL Reference is Secondary input
					1	PLL Input MUX is set to Automatic Mode

10.6.46 IPCLKCTL Register; R51

Input Clock Control

Bit #	Field	Type	Reset	EEPROM	Description	
[7]	CLKMUX_BYPASS	RW	0	Y	Clock Mux Bypass. Controls whether the glitch-less clock mux on the the Primary and Secondary Reference paths is enabled. When CLKMUX_BYPASS is 1 then the clock mux is by-passed.	
[6:3]	RSRVD	RW	0x0	Y	Reserved.	
[2]	SECONSWITCH	RW	0	Y	Secondary Crystal Input Buffer On after Switch. Determines whether the Secondary Crystal Input Buffer remains on after a switch back to the Primary Input. If SECONSWITCH is 0 then the Secomdary Crystal Input Buffer is disabled after a switch back to the Primary input. If SECONSWITCH is 1 then the Secondary Crystal Input Buffer remains active after a switch back to the Primary input.	
[1]	SECBUFGAIN	RW	1	Y	Secondary Input Buffer Gain.	
					SECBUFGAIN	GAIN
					0	Minimum
					1	Maximum
[0]	PRIBUFGAIN	RW	1	Y	Primary Input Buffer Gain.	
					PRIBUFGAIN	GAIN
					0	Minimum
					1	Maximum

10.6.47 PLL_RDIV Register; R52

R Divider for PLL

Bit #	Field	Type	Reset	EEPROM	Description	
[7:3]	RSRVD	-	-	N	Reserved.	
[2:0]	PLLRDIV[2:0]	RW	0x0	Y	PLL R Divider. PLL R Divider ratio is set by PLLRDIV.	
					PLLRDIV	PLL R-Divider Value
					0 (0x0)	Bypass
					1 (0x1)	2
					...	...
					7 (0x7)	8

10.6.48 PLL_MDIV Register; R53

M Divider for PLL

Bit #	Field	Type	Reset	EEPROM	Description	
[7:5]	RSRVD	-	-	N	Reserved.	
[4:0]	PLLMDIV[4:0]	RW	0x00	Y	PLL M Divider. PLL M Divider ratio is set by PLLMDIV.	
					PLLMDIV	PLL M-Divider Value
					0 (0x00)	Bypass
					1 (0x01)	2
					...	...
					31 (0x1F)	32

Copyright © 2015–2016, Texas Instruments Incorporated

10.6.49 PLL_CTRL0 Register; R56

The PLL_CTRL0 register provides control of PLL. The PLL_CTRL0 register fields are described in the following table.

Bit #	Field	Type	Reset	EEPROM	Description	
[7:5]	RSRVD	-	-	N	Reserved.	
[4:2]	PLL_P[2:0]	RW	0x7	Y	PLL Post-Divider. The PLL_P field selects the PLL post-divider value as follows.	
					PLL_P	Post Divider Value
					0 (0x0)	2
					1 (0x1)	2
					2 (0x2)	3
					3 (0x3)	4
					4 (0x4)	5
					5 (0x5)	6
					6 (0x6)	7
					7 (0x7)	8
[1]	PLL_SYNC_EN	RW	1	Y	PLL SYNC Enable. If PLL_SYNC_EN is 1 then a SYNC event will cause all channels which use PLL as a clock source to be re-synchronized.	
[0]	PLL_PDN	RW	0	Y	PLL Powerdown. The PLL_PDN bit determines whether PLL is automatically enabled and calibrated after a hardware reset. If the PLL_PDN bit is set to 1 during normal operation then PLL is disabled and the calibration circuit is reset. When PLL_PDN is then cleared to 0 PLL is re-enabled and the calibration sequence is automatically restarted.	
					PLL_PDN	PLL STATE
					0	PLL Enabled
					1	PLL Disabled

10.6.50 PLL_CTRL1 Register; R57

The PLL_CTRL1 register provides control of PLL. The PLL_CTRL1 register fields are described in the following table.

Bit #	Field	Type	Reset	EEPROM	Description	
[7:6]	RSRVD	-	-	N	Reserved.	
[5]	RSRVD	RW	0	Y	Reserved.	
[4]	PRI_D	RW	1	Y	Primary Reference Doubler Enable. If PRI_D is 1 the Primary Input Frequency Doubler is enabled.	
[3:0]	PLL_CP[3:0]	RW	0x8	Y	PLL Charge Pump Gain. The PLL_CP sets the chargepump current as follows.	
					PLL_CP	Icp (mA)
					1 (0x1)	0.4
					2 (0x2)	0.8
					3 (0x3)	1.2
					4 (0x4)	1.6
					5 (0x5)	2.0
					6 (0x6)	2.4
					7 (0x7)	2.8
					8 (0x8)	6.4

10.6.51 PLL_NDIV_BY1 Register; R58

The 12-bit N integer divider value for PLL is set by the PLL_NDIV_BY1 and PLL_NDIV_BY0 registers.

Bit #	Field	Type	Reset	EEPROM	Description	
[7:4]	RSRVD	-	-	N	Reserved.	
[3:0]	PLL_NDIV[11:8]	RW	0x0	Y	PLL N Divider Byte 1. PLL Integer N Divider bits 11 to 8.	
					PLL_NDIV	DIVIDER RATIO
					0 (0x000)	1
					1 (0x001)	1
					...	...
					4095 (0xFFF)	4095

10.6.52 PLL_NDIV_BY0 Register; R59

The PLL_NDIV_BY0 register is described in the following table.

Bit #	Field	Type	Reset	EEPROM	Description
[7:0]	PLL_NDIV[7:0]	RW	0x66	Y	PLL N Divider Byte 0. PLL Integer N Divider bits 7 to 0.

10.6.53 PLL_FRACNUM_BY2 Register; R60

The Fractional Divider Numerator value for PLL is set by registers PLL_FRACNUM_BY2, PLL_FRACNUM_BY1 and PLL_FRACNUM_BY0.

Bit #	Field	Type	Reset	EEPROM	Description
[7:6]	RSRVD	-	-	N	Reserved.
[5:0]	PLL_NUM[21:16]	RW	0x00	Y	PLL Fractional Divider Numerator Byte 2. Bits 21 to 16.

10.6.54 PLL_FRACNUM_BY1 Register; R61

The PLL_FRACNUM_BY1 register is described in the following table.

Bit #	Field	Type	Reset	EEPROM	Description
[7:0]	PLL_NUM[15:8]	RW	0x00	Y	PLL Fractional Divider Numerator Byte 1. Bits 15 to 8.

10.6.55 PLL_FRACNUM_BY0 Register; R62

The PLL_FRACNUM_BY0 register is described in the following table.

Bit #	Field	Type	Reset	EEPROM	Description
[7:0]	PLL_NUM[7:0]	RW	0x00	Y	PLL Fractional Divider Numerator Byte 0. Bits 7 to 0.

10.6.56 PLL_FRACDEN_BY2 Register; R63

The Fractional Divider Denominator value for PLL is set by registers PLL_FRACDEN_BY2, PLL_FRACDEN_BY1 and PLL_FRACDEN_BY0.

Bit #	Field	Type	Reset	EEPROM	Description
[7:6]	RSRVD	-	-	N	Reserved.
[5:0]	PLL_DEN[21:16]	RW	0x00	Y	PLL Fractional Divider Denominator Byte 2. Bits 21 to 16.

Copyright © 2015–2016, Texas Instruments Incorporated

10.6.57 PLL_FRACDEN_BY1 Register; R64

The PLL_FRACDEN_BY1 register is described in the following table.

Bit #	Field	Type	Reset	EEPROM	Description
[7:0]	PLL_DEN[15:8]	RW	0x00	Y	PLL Fractional Divider Denominator Byte 1. Bits 15 to 8.

10.6.58 PLL_FRACDEN_BY0 Register; R65

The PLL_FRACDEN_BY0 register is described in the following table.

Bit #	Field	Type	Reset	EEPROM	Description
[7:0]	PLL_DEN[7:0]	RW	0x00	Y	PLL Fractional Divider Denominator Byte 0. Bits 7 to 0.

10.6.59 PLL_MASHCTRL Register; R66

The PLL_MASHCTRL register provides control of the fractional divider for PLL.

Bit #	Field	Type	Reset	EEPROM	Description	
[7:4]	RSRVD	-	-	N	Reserved.	
[3:2]	PLL_DTHRMODE[1:0]	RW	0x3	Y	Mash Engine dither mode control.	
					DITHERMODE	Dither Configuration
					0 (0x0)	Weak
					1 (0x1)	Medium
					2 (0x2)	Strong
					3 (0x3)	Dither Disabled
[1:0]	PLL_ORDER[1:0]	RW	0x0	Y	Mash Engine Order.	
					ORDER	Order Configuration
					0 (0x0)	Integer Mode Divider
					1 (0x1)	1st order
					2 (0x2)	2nd order
					3 (0x3)	3rd order

10.6.60 PLL_LF_R2 Register; R67

The PLL_LF_R2 register controls the value of the PLL Loop Filter R2.

Bit #	Field	Type	Reset	EEPROM	Description	
[7:6]	RSRVD	-	-	N	Reserved.	
[5:0]	PLL_LF_R2[5:0]	RW	0x24	Y	PLL Loop Filter R2. NOTE: Table below lists commonly used R2 values but more selections are available.	
					PLL_LF_R2[5:0]	R2 (Ω)
					1 (0x01)	236
					2 (0x02)	336
					4 (0x04)	536
					8 (0x08)	735
					32 (0x20)	1636
					48 (0x30)	2418

10.6.61 PLL_LF_C1 Register; R68

The PLL_LF_C1 register controls the value of the PLL Loop Filter C1.

Bit #	Field	Type	Reset	EEPROM	Description
[7:3]	RSRVD	-	-	N	Reserved.
[2:0]	PLL_LF_C1[2:0]	RW	0x0	Y	PLL Loop Filter C1. The value in pF is given by 5 + 50 * PLL_LF_C1 (in binary).

10.6.62 PLL_LF_R3 Register; R69

The PLL_LF_R3 register controls the value of the PLL Loop Filter R3.

Bit #	Field	Type	Reset	EEPROM	Description	
[7]	RSRVD	-	-	N	Reserved.	
[6:1]	PLL_LF_R3[5:0]	RW	0x0	Y	PLL Loop Filter R3. NOTE: Table below lists commonly used R3 values but more selections are available.	
					PLL_LF_R3[5:0]	R3 (Ω)
					0 (0x00)	18
					2 (0x02)	318
					4 (0x04)	518
					8 (0x08)	717
					16 (0x10)	854
					32 (0x20)	1654
					64 (0x40)	3254
[0]	PLL_LF_INT_FRAC	RW	0	Y	PLL Loop Filter Setting. Set to 0 for integer PLL and to 1 for fractional PLL.	

10.6.63 PLL_LF_C3 Register; R70

The PLL_LF_C3 register controls the value of the PLL Loop Filter C3.

Bit #	Field	Type	Reset	EEPROM	Description
[7:3]	RSRVD	-	-	N	Reserved.
[2:0]	PLL_LF_C3[2:0]	RW	0x0	Y	PLL Loop Filter C3. The value in pF is given by 5 * PLL_LF_C3 (in binary).

10.6.64 SEC_CTRL Register; R72

The SEC_CTRL register controls the value of the Secondary Reference Doubler.

Bit #	Field	Type	Reset	EEPROM	Description
[7:6]	RSRVD	-	-	N	Reserved.
[5]	RSRVD	RW	0	Y	Reserved.
[4]	SEC_D	RW	1	Y	Secondary Reference Doubler Enable. If SEC_D is 1 the Secondary Input Frequency Doubler is enabled.
[3:0]	RSRVD	RW	0x8	Y	Reserved.

Copyright © 2015–2016, Texas Instruments Incorporated

10.6.65 XO_MARGINING Register; R86

Margin Control

Bit #	Field	Type	Reset	EEPROM	Description	
[7]	RSRVD	-	-	N	Reserved.	
[6:4]	MARGIN_DIG_STEP[2:0]	R	0x0	N	Margin Digital Step. MARGIN_DIG_STEP allows the current level of the margin selection pin (GPIO[5]) to be read.	
					MARGIN_DIG_STEP	Value
					0 (0x0)	STEP1
					1 (0x1)	STEP2
					2 (0x2)	STEP3
					3 (0x3)	STEP4. (Nominal loading for zero frequency offset
					4 (0x4)	STEP5
					5 (0x5)	STEP6
					6 (0x6)	STEP7
					7 (0x7)	STEP8
[3:2]	MARGIN_OPTION[1:0]	RW	0x0	Y	Margin Option Select. The MARGIN_OPTION field defines the operation of the Frequency Margining as follows.	
					MARGIN_OPTIONS	MARGIN Mode
					0 (0x0)	Margining Enabled when GPIO4 pin is low. GPIO5 pin selects the frequency offset setting (STEP1 to STEP8). When GPIO4 pin is high, STEP4 offset value is selected to use the nominal crystal loading.
					1 (0x1)	Margining Enabled. GPIO5 pin selects the frequency offset setting (STEP1 to STEP8). GPIO4 pin state is ignored.
					2 (0x2)	Margining Enabled. Frequency offset is controlled by XOOFFSET_SW register bits (R104 and R105).
[1:0]	RSRVD	-	-		N	Reserved.

10.6.66 XO_OFFSET_GPIO5_STEP_1_BY1 Register; R88

XO Margining Step 1 Offset Value (bits 9-8)

Bit #	Field	Type	Reset	EEPROM	Description
[7:2]	RSRVD	-	-	N	Reserved.
[1:0]	XOOFFSET_STEP1[9:8]	RW	0x00	Y	XO Margining Step 1 Offset Value.

10.6.67 XO_OFFSET_GPIO5_STEP_1_BY0 Register; R89

XO Margining Step 1 Offset Value (bits 7-0)

Bit #	Field	Type	Reset	EEPROM	Description
[7:0]	XOOFFSET_STEP1[7:0]	RW	0xDE	Y	XO Margining Step 1 Offset Value.

10.6.68 XO_OFFSET_GPIO5_STEP_2_BY1 Register; R90

XO Margining Step 1 Offset Value (bits 9-8)

Bit #	Field	Type	Reset	EEPROM	Description
[7:2]	RSRVD	-	-	N	Reserved.
[1:0]	XOOFFSET_STEP2[9:8]	RW	0x01	Y	XO Margining Step 2 Offset Value.

10.6.69 XO_OFFSET_GPIO5_STEP_2_BY0 Register; R91

XO Margining Step 2 Offset Value (bits 7-0)

Bit #	Field	Type	Reset	EEPROM	Description
[7:0]	XOOFFSET_STEP2[7:0]	RW	0x18	Y	XO Margining Step 2 Offset Value.

10.6.70 XO_OFFSET_GPIO5_STEP_3_BY1 Register; R92

XO Margining Step 3 Offset Value (bits 9-8)

Bit #	Field	Type	Reset	EEPROM	Description
[7:2]	RSRVD	-	-	N	Reserved.
[1:0]	XOOFFSET_STEP3[9:8]	RW	0x01	Y	XO Margining Step 3 Offset Value.

10.6.71 XO_OFFSET_GPIO5_STEP_3_BY0 Register; R93

XO Margining Step 3 Offset Value (bits 7-0)

Bit #	Field	Type	Reset	EEPROM	Description
[7:0]	XOOFFSET_STEP3[7:0]	RW	0x4B	Y	XO Margining Step 3 Offset Value.

10.6.72 XO_OFFSET_GPIO5_STEP_4_BY1 Register; R94

XO Margining Step 4 Offset Value (bits 9-8)

Bit #	Field	Type	Reset	EEPROM	Description
[7:2]	RSRVD	-	-	N	Reserved.
[1:0]	XOOFFSET_STEP4[9:8]	RW	0x1	Y	XO Margining Step 4 Offset Value.

10.6.73 XO_OFFSET_GPIO5_STEP_4_BY0 Register; R95

XO Margining Step 4 Offset Value (bits 7-0)

Bit #	Field	Type	Reset	EEPROM	Description
[7:0]	XOOFFSET_STEP4[7:0]	RW	0x86	Y	XO Margining Step 4 Offset Value.

10.6.74 XO_OFFSET_GPIO5_STEP_5_BY1 Register; R96

XO Margining Step 5 Offset Value (bits 9-8)

Bit #	Field	Type	Reset	EEPROM	Description
[7:2]	RSRVD	-	-	N	Reserved.
[1:0]	XOOFFSET_STEP5[9:8]	RW	0x1	Y	XO Margining Step 5 Offset Value.

10.6.75 XO_OFFSET_GPIO5_STEP_5_BY0 Register; R97

XO Margining Step 5 Offset Value (bits 7-0)

Bit #	Field	Type	Reset	EEPROM	Description
[7:0]	XOOFFSET_STEP5[7:0]	RW	0xBE	Y	XO Margining Step 5 Offset Value.

Copyright © 2015–2016, Texas Instruments Incorporated

10.6.76 XO_OFFSET_GPIO5_STEP_6_BY1 Register; R98

XO Margining Step 6 Offset Value (bits 9-8)

Bit #	Field	Type	Reset	EEPROM	Description
[7:2]	RSRVD	-	-	N	Reserved.
[1:0]	XOOFFSET_STEP6[9:8]	RW	0x1	Y	XO Margining Step 6 Offset Value.

10.6.77 XO_OFFSET_GPIO5_STEP_6_BY0 Register; R99

XO Margining Step 6 Offset Value (bits 7-0)

Bit #	Field	Type	Reset	EEPROM	Description
[7:0]	XOOFFSET_STEP6[7:0]	RW	0xFE	Y	XO Margining Step 6 Offset Value.

10.6.78 XO_OFFSET_GPIO5_STEP_7_BY1 Register; R100

XO Margining Step 7 Offset Value (bits 9-8)

Bit #	Field	Type	Reset	EEPROM	Description
[7:2]	RSRVD	-	-	N	Reserved.
[1:0]	XOOFFSET_STEP7[9:8]	RW	0x2	Y	XO Margining Step 7 Offset Value.

10.6.79 XO_OFFSET_GPIO5_STEP_7_BY0 Register; R101

XO Margining Step 7 Offset Value (bits 7-0)

Bit #	Field	Type	Reset	EEPROM	Description
[7:0]	XOOFFSET_STEP7[7:0]	RW	0x47	Y	XO Margining Step 7 Offset Value.

10.6.80 XO_OFFSET_GPIO5_STEP_8_BY1 Register; R102

XO Margining Step 8 Offset Value (bits 9-8)

Bit #	Field	Type	Reset	EEPROM	Description
[7:2]	RSRVD	-	-	N	Reserved.
[1:0]	XOOFFSET_STEP8[9:8]	RW	0x2	Y	XO Margining Step 8 Offset Value.

10.6.81 XO_OFFSET_GPIO5_STEP_8_BY0 Register; R103

XO Margining Step 8 Offset Value (bits 7-0)

Bit #	Field	Type	Reset	EEPROM	Description
[7:0]	XOOFFSET_STEP8[7:0]	RW	0x9E	Y	XO Margining Step 8 Offset Value.

10.6.82 XO_OFFSET_SW_BY1 Register; R104

Software Controlled XO Margining Offset Value (bits 9-8).

Bit #	Field	Type	Reset	EEPROM	Description
[7:2]	RSRVD	-	-	N	Reserved.
[1:0]	XOOFFSET_SW[9:8]	RW	0x0	Y	XO Margining Software Controlled Offset Value.

10.6.83 XO_OFFSET_SW_BY0 Register; R105

Software Controlled XO Margining Offset Value (bits 7-0).

Bit #	Field	Type	Reset	EEPROM	Description
[7:0]	XOOFFSET_SW[7:0]	RW	0x00	Y	XO Margining Software Controlled Offset Value.

10.6.84 PLL_CTRL2 Register; R117

The PLL_CTRL2 register provides control of PLL. The PLL_CTRL2 register fields are described in the following table.

Bit #	Field	Type	Reset	EEPROM	Description
[7]	PLL_STRETCH	RW	0	Y	Stretch PFD minimum pump width in fractional mode. A value of 0 is recommended for Integer-N PLL and sets the phase detector pulse width to 200 ps. A value of 1 is recommended for Fractional-N PLL and stretches the pulse width to roughly 600 ps.
[6:0]	RSRVD	-	-	N	Reserved.

10.6.85 PLL_CTRL3 Register; R118

The PLL_CTRL3 register provides control of PLL. The PLL_CTRL3 register fields are described in the following table.

Bit #	Field	Type	Reset	EEPROM	Description	
[7:3]	RSRVD	-	-	N	Reserved.	
[2:0]	PLL_DISABLE_4TH[2:0]	RW	0x3	Y	PLL Loop Filter Settings.	
					PLL_DISABLE_4TH[2:0]	**MODE**
					0 (0x0), 1 (0x1), 2 (0x2)	RESERVED
					3 (0x3)	2nd Order Loop Filter Recommended Setting for Integer PLL Mode.
					4 (0x4), 5 (0x5), 6 (0x6)	RESERVED
					7 (0x7)	3rd Order Loop Filter Recommended Setting for Fractional PLL Mode.

10.6.86 PLL_CALCTRL0 Register; R119

The PLL_CALCTRL0 register is described in the following table.

Bit #	Field	Type	Reset	EEPROM	Description	
[7:4]	RSRVD	-	-	N	Reserved.	
[3:2]	PLL_CLSDWAIT[1:0]	RW	0x0	Y	Closed Loop Wait Period. The CLSDWAIT field sets the closed loop wait period, in periods of the always on clock as follows. Use 0x1 for clock generator mode (> 10 kHz loop bandwidth) and 0x3 for jitter cleaner mode (< 1 kHz loop bandwidth).	
					CLSDWAIT	Analog closed loop VCO stabilization time
					0 (0x0)	30 µs
					1 (0x1)	300 µs
					2 (0x2)	30 ms
					3 (0x3)	300 ms
[1:0]	PLL_VCOWAIT[1:0]	RW	0x1	Y	VCO Wait Period. Use 0x1 for all modes.	
					VCOWAIT	VCO stabilization time
					0 (0x0)	20 µs
					1 (0x1)	400 µs
					2 (0x2)	8000 µs
					3 (0x3)	200000 µs

Copyright © 2015–2016, Texas Instruments Incorporated

10.6.87 PLL_CALCTRL1 Register; R120

The PLL_CALCTRL1 register is described in the following table.

Bit #	Field	Type	Reset	EEPROM	Description
[7:1]	RSRVD	-	-	N	Reserved.
[0]	PLL_LOOPBW	RW	0	Y	PLL Loop bandwidth Control. When PLL_LOOPBW is 1 the loop bandwidth of PLL is reduced to 200 Hz (jitter cleaner mode). When PLL_LOOPBW is 0 the loop bandwidth of PLL is set to its normal range (clock generator mode). NOTE: Proper PLL settings need to be utilized (PFD, charge pump, loop filter) with setting the desired value for PLL_LOOPBW.

10.6.88 NVMCNT Register; R136

The NVMCNT register is intended to reflect the number of on-chip EEPROM Erase/Program cycles that have taken place in EEPROM. The count is automatically incremented by hardware and stored in EEPROM.

Bit #	Field	Type	Reset	EEPROM	Description
[7:0]	NVMCNT[7:0]	R	0x00	Y	EEPROM Program Count. The NVMCNT increments automatically after every EEPROM Erase/Program Cycle. The NVMCNT value is retreived automatically after reset, after a EEPROM Commit operation or after a Erase/Program cycle. The NVMCNT register will increment until it reaches its maximum value of 255 after which no further increments will take place.

10.6.89 NVMCTL Register; R137

The NVMCTL register allows control of the on-chip EEPROM Memories.

Bit #	Field	Type	Reset	EEPROM	Description
[7]	RSRVD	-	-	N	Reserved.
[6]	REGCOMMIT	RWSC	0	N	REG Commit to EEPROM SRAM Array. The REGCOMMIT bit is used to initiate a transfer from the on-chip registers back to the corresponding location in the EEPROM SRAM Array. The REGCOMMIT bit is automatically cleared to 0 when the transfer is complete. The particular page of SRAM used as the destination for the transfer is selected by the REGCOMMIT_PAGE register.
[5]	NVMCRCERR	R	0	N	EEPROM CRC Error Indication. The NVMCRCERR bit is set to 1 if a CRC Error has been detected when reading back from on-chip EEPROM during device configuration.
[4]	NVMAUTOCRC	RW	1	N	EEPROM Automatic CRC. When NVMAUTOCRC is 1 then the EEPROM Stored CRC byte is automatically calculated whenever an EEPROM program takes place.
[3]	NVMCOMMIT	RWSC	0	N	EEPROM Commit to Registers. The NVMCOMMIT bit is used to initiate a transfer of the on-chip EEPROM contents to internal registers. The transfer happens automatically after reset or when NVMCOMMIT is set to 1. The NVMCOMMIT bit is automatically cleared to 0. The I^2C registers cannot be read while a EEPROM Commit operation is taking place. The NVMCOMMIT operation can only carried out when the Always On Clock is active. The Always On Clock can be kept running after lock by setting the AONAFTERLOCK bit.
[2]	NVMBUSY	R	0	N	EEPROM Program Busy Indication. The NVMBUSY bit is 1 during an on-chip EEPROM Erase/Program cycle. While NVMBUSY is 1 the on-chip EEPROM cannot be accessed.
[1]	RSRVD	RWSC	0	N	Reserved.
[0]	NVMPROG	RWSC	0	N	EEPROM Program Start. The NVMPROG bit is used to begin an on-chip EEPROM Erase/Program cycle. The Erase/Program cycle is only initiated if the immediately preceding I^2C transaction was a write to the NVMUNLK register with the appropriate code. The NVMPROG bit is automatically cleared to 0. The EEPROM Erase/Program operation takes around 230 ms.

10.6.90 NVMLCRC Register; R138

The NVMLCRC register holds the Live CRC byte that has been calculated while reading on-chip EEPROM.

Bit #	Field	Type	Reset	EEPROM	Description
[7:0]	NVMLCRC[7:0]	R	0x00	N	EEPROM Live CRC.

10.6.91 MEMADR_BY1 Register; R139

The MEMADR_BY1 register holds the MSB of the starting address for on-chip SRAM or EEPROM access.

Bit #	Field	Type	Reset	EEPROM	Description
[7:4]	RSRVD	-	-	N	Reserved.
[3:0]	MEMADR[11:8]	RW	0x0	N	Memory Address. The MEMADR value determines the starting address for access to the on-chip memories. The on-chip memories and the corresponding address ranges are listed below. The data from the selected address is then accessed using one of the data registers listed below.

MEMORY	MEMADR Range	Data Register
EEPROM EEPROM-Array	MEMADR[8:0]	NVMDAT
EEPROM SRAM-Array	MEMADR[8:0]	RAMDAT
ROM-Array	MEMADR[11:0]	ROMDAT

10.6.92 MEMADR_BY0 Register; R140

The MEMADR_BY0 register holds the lower 8-bits of the starting address for on-chip SRAM or EEPROM access.

Bit #	Field	Type	Reset	EEPROM	Description
[7:0]	MEMADR[7:0]	RW	0x00	N	Memory Address.

10.6.93 NVMDAT Register; R141

The NVMDAT register returns the on-chip EEPROM contents from the starting address specified by the MEMADR register.

Bit #	Field	Type	Reset	EEPROM	Description
[7:0]	NVMDAT[7:0]	R	0x00	N	EEPROM Read Data. The first time an I^2C read transaction accesses the NVMDAT register address, either because it was explicitly targeted or because the address was auto-incremented, the read transaction will return the EEPROM data located at the address specified by the MEMADR register. Any additional read's which are part of the same transaction will cause the EEPROM address to be incremented and the next EEPROM data byte will be returned. The I^2C address will no longer be auto-incremented, i.e the I^2C address will be locked to the NVMDAT register after the first access. Access to the NVMDAT register will terminate at the end of the current I^2C transaction.

10.6.94 RAMDAT Register; R142

The RAMDAT register provides read and write access to the SRAM that forms part of the on-chip EEPROM module.

Bit #	Field	Type	Reset	EEPROM	Description
[7:0]	RAMDAT[7:0]	RW	0x00	N	RAM Read/Write Data. The first time an I^2C read or write transaction accesses the RAMDAT register address, either because it was explicitly targeted or because the address was auto-incremented, a read transaction will return the RAM data located at the address specified by the MEMADR register and a write transaction will cause the current I^2C data to be written to the address specified by the MEMADR register. Any additional accesses which are part of the same transaction will cause the RAM address to be incremented and a read or write access will take place to the next SRAM address. The I^2C address will no longer be auto-incremented, i.e the I^2C address will be locked to the RAMDAT register after the first access. Access to the RAMDAT register will terminate at the end of the current I^2Cs transaction.

Copyright © 2015–2016, Texas Instruments Incorporated

10.6.95 ROMDAT Register; R143

The romdat register provides read to the on-chip ROM module.

Bit #	Field	Type	Reset	EEPROM	Description
[7:0]	ROMDAT[7:0]	R	0x00	N	ROM Read Data. The first time an I^2C read or write transaction accesses the romdat register address, either because it was explicitly targeted or because the address was auto-incremented, a read transaction will return the ROM data located at the address specified by the MEMADR register. Any additional accesses which are part of the same transaction will cause the ROM address to be incremented and a read access will take place to the next ROM address. The I^2C address will no longer be auto-incremented, i.e the I^2C address will be locked to the romdat register after the first access. Access to the ROMDAT register will terminate at the end of the current I^2C transaction.

10.6.96 NVMUNLK Register; R144

The NVMUNLK register provides a rudimentary level of protection to prevent inadvertent programming of the on-chip EEPROM.

Bit #	Field	Type	Reset	EEPROM	Description
[7:0]	NVMUNLK[7:0]	RW	0x0	N	EEPROM Prog Unlock. The NVMUNLK register must be written immediately prior to setting the NVMPROG bit of register NVMCTL, otherwise the Erase/Program cycle will not be triggered. NVMUNLK must be written with a value of 0xEA.

10.6.97 REGCOMMIT_PAGE Register; R145

The REGCOMMIT_PAGE register determines the region of the EEPROM/SRAM array that is populated by the REGCOMMIT operation.

Bit #	Field	Type	Reset	EEPROM	Description
[7:4]	RSRVD	-	-	N	Reserved.
[3:0]	REGCOMMIT_PG[3:0]	RW	0x0	N	Register Commit Page (1 of 6 available pages that can be selected by the GPIO[3:2] pins for default powerup state. NOTE: Valid page values are 0 to 5. Do not use other values.)

10.6.98 XOCAPCTRL_BY1 Register; R199

The XOCAPCTRL_BY1 and XOCAPCTRL_BY0 registers allow read-back of the XOCAPCTRL value that displays the on-chip load capacitance selected for the crystal.

Bit #	Field	Type	Reset	EEPROM	Description
[7:2]	RSRVD	-	-	N	Reserved.
[1:0]	XO_CAP_CTRL[9:8]	R	0x0	N	XO CAP CTRL register.

10.6.99 XOCAPCTRL_BY0 Register; R200

The XOCAPCTRL_BY1 and XOCAPCTRL_BY0 registers allow read-back of the XOCAPCTRL value that displays the on-chip load capacitance selected for the crystal.

Bit #	Field	Type	Reset	EEPROM	Description
[7:0]	XO_CAP_CTRL[7:0]	R	0x00	N	XO CAP CTRL register.

10.7 EEPROM Map

The EEPROM map is shown in the table below. There are 6 EEPROM pages and the common EEPROM bits are shown first. Any bit that is labeled as "RSRVD" should be written with a 0.

Byte #	Bit7	Bit6	Bit5	Bit4	Bit3	Bit2	Bit1	Bit0
0	RSRVD	RSRVD	RSRVD	RSRVD	RSRVD	RSRVD	RSRVD	1
1	RSRVD	RSRVD	RSRVD	RSRVD	RSRVD	RSRVD	RSRVD	RSRVD
2	RSRVD	RSRVD	RSRVD	RSRVD	RSRVD	RSRVD	RSRVD	RSRVD
3	RSRVD	RSRVD	RSRVD	RSRVD	RSRVD	RSRVD	RSRVD	RSRVD
4	NVMSCRC[7]	NVMSCRC[6]	NVMSCRC[5]	NVMSCRC[4]	NVMSCRC[3]	NVMSCRC[2]	NVMSCRC[1]	NVMSCRC[0]
5	NVMCNT[7]	NVMCNT[6]	NVMCNT[5]	NVMCNT[4]	NVMCNT[3]	NVMCNT[2]	NVMCNT[1]	NVMCNT[0]
11	SLAVEADR_GPIO1_SW[7]	SLAVEADR_GPIO1_SW[6]	SLAVEADR_GPIO1_SW[5]	SLAVEADR_GPIO1_SW[4]	SLAVEADR_GPIO1_SW[3]	RSRVD	RSRVD	RSRVD
12	EEREV[7]	EEREV[6]	EEREV[5]	EEREV[4]	EEREV[3]	EEREV[2]	EEREV[1]	EEREV[0]
13	SYNC_AUTO	SYNC_MUTE	AONAFTERLOCK	PLLSTRTMODE	AUTOSTRT	LOL_MASK	LOS_MASK	CAL_MASK
14	1	1	1	SECTOPRI_MASK	1	LOL_POL	LOS_POL	CAL_POL
15	RSRVD	RSRVD	RSRVD	SECTOPRI_POL	RSRVD	INT_AND_OR	INT_EN	STAT1_SHOOT_THRU_LIMIT
16	STAT0_SHOOT_THRU_LIMIT	RSRVD	RSRVD	STAT1_OPEND	STAT0_OPEND	CH3_MUTE_LVL[1]	CH3_MUTE_LVL[0]	CH2_MUTE_LVL[1]
17	CH2_MUTE_LVL[0]	CH1_MUTE_LVL[1]	CH1_MUTE_LVL[0]	CH0_MUTE_LVL[1]	CH0_MUTE_LVL[0]	CH7_MUTE_LVL[1]	CH7_MUTE_LVL[0]	CH6_MUTE_LVL[1]
18	CH6_MUTE_LVL[0]	CH5_MUTE_LVL[1]	CH5_MUTE_LVL[0]	CH4_MUTE_LVL[1]	CH4_MUTE_LVL[0]	CH_7_MUTE	CH_6_MUTE	CH_5_MUTE
19	CH_4_MUTE	CH_3_MUTE	CH_2_MUTE	CH_1_MUTE	CH_0_MUTE	STATUS1_MUTE	STATUS0_MUTE	DIV_7_DYN_DLY
20	DIV_6_DYN_DLY	DIV_5_DYN_DLY	DIV_4_DYN_DLY	DIV_23_DYN_DLY	DIV_01_DYN_DLY	DETECT_MODE_SEC[1]	DETECT_MODE_SEC[0]	DETECT_MODE_PRI[1]
21	DETECT_MODE_PRI[0]	LVL_SEL_SEC[1]	LVL_SEL_SEC[0]	LVL_SEL_PRI[1]	LVL_SEL_PRI[0]	RSRVD	RSRVD	RSRVD
22	RSRVD	RSRVD	RSRVD	XOOFFSET_STEP1[9]	XOOFFSET_STEP1[8]	XOOFFSET_STEP1[7]	XOOFFSET_STEP1[6]	XOOFFSET_STEP1[5]
23	XOOFFSET_STEP1[4]	XOOFFSET_STEP1[3]	XOOFFSET_STEP1[2]	XOOFFSET_STEP1[1]	XOOFFSET_STEP1[0]	XOOFFSET_STEP2[9]	XOOFFSET_STEP2[8]	XOOFFSET_STEP2[7]
24	XOOFFSET_STEP2[6]	XOOFFSET_STEP2[5]	XOOFFSET_STEP2[4]	XOOFFSET_STEP2[3]	XOOFFSET_STEP2[2]	XOOFFSET_STEP2[1]	XOOFFSET_STEP2[0]	XOOFFSET_STEP3[9]
25	XOOFFSET_STEP3[8]	XOOFFSET_STEP3[7]	XOOFFSET_STEP3[6]	XOOFFSET_STEP3[5]	XOOFFSET_STEP3[4]	XOOFFSET_STEP3[3]	XOOFFSET_STEP3[2]	XOOFFSET_STEP3[1]
26	XOOFFSET_STEP3[0]	XOOFFSET_STEP5[9]	XOOFFSET_STEP5[8]	XOOFFSET_STEP5[7]	XOOFFSET_STEP5[6]	XOOFFSET_STEP5[5]	XOOFFSET_STEP5[4]	XOOFFSET_STEP5[3]

Copyright © 2015–2016, Texas Instruments Incorporated

EEPROM Map (continued)

Byte #	Bit7	Bit6	Bit5	Bit4	Bit3	Bit2	Bit1	Bit0
27	XOOFFSET_STEP5[2]	XOOFFSET_STEP5[1]	XOOFFSET_STEP5[0]	XOOFFSET_STEP6[9]	XOOFFSET_STEP6[8]	XOOFFSET_STEP6[7]	XOOFFSET_STEP6[6]	XOOFFSET_STEP6[5]
28	XOOFFSET_STEP6[4]	XOOFFSET_STEP6[3]	XOOFFSET_STEP6[2]	XOOFFSET_STEP6[1]	XOOFFSET_STEP6[0]	XOOFFSET_STEP7[9]	XOOFFSET_STEP7[8]	XOOFFSET_STEP7[7]
29	XOOFFSET_STEP7[6]	XOOFFSET_STEP7[5]	XOOFFSET_STEP7[4]	XOOFFSET_STEP7[3]	XOOFFSET_STEP7[2]	XOOFFSET_STEP7[1]	XOOFFSET_STEP7[0]	XOOFFSET_STEP8[9]
30	XOOFFSET_STEP8[8]	XOOFFSET_STEP8[7]	XOOFFSET_STEP8[6]	XOOFFSET_STEP8[5]	XOOFFSET_STEP8[4]	XOOFFSET_STEP8[3]	XOOFFSET_STEP8[2]	XOOFFSET_STEP8[1]
31	XOOFFSET_STEP8[0]	XOOFFSET_SW[9]	XOOFFSET_SW[8]	XOOFFSET_SW[7]	XOOFFSET_SW[6]	XOOFFSET_SW[5]	XOOFFSET_SW[4]	XOOFFSET_SW[3]
32	XOOFFSET_SW[2]	XOOFFSET_SW[1]	XOOFFSET_SW[0]	RSRVD	RSRVD	1	RSRVD	1
33	1	RSRVD	RSRVD	RSRVD	RSRVD	RSRVD	RSRVD	1
34	1	RSRVD	RSRVD	1	1	RSRVD	RSRVD	RSRVD
35	RSRVD	RSRVD	RSRVD	1	1	RSRVD	RSRVD	1
36	RSRVD	1	RSRVD	1	RSRVD	RSRVD	1	RSRVD
37	RSRVD	RSRVD	RSRVD	RSRVD	RSRVD	RSRVD	RSRVD	RSRVD
38	RSRVD	RSRVD	RSRVD	RSRVD	RSRVD	RSRVD	RSRVD	RSRVD
	EEPROM_PAGE=0, 1, 2, 3, 4, 5							
39, 90, 141, 192, 243, 294	RSRVD	OUT_0_SEL[1]	OUT_0_SEL[0]	OUT_0_MODE1[1]	OUT_0_MODE1[0]	OUT_0_MODE2[1]	OUT_0_MODE2[0]	OUT_1_SEL[1]
40, 91, 142, 193, 244, 295	OUT_1_SEL[0]	OUT_1_MODE1[1]	OUT_1_MODE1[0]	OUT_1_MODE2[1]	OUT_1_MODE2[0]	OUT_0_1_DIV[7]	OUT_0_1_DIV[6]	OUT_0_1_DIV[5]
41, 92, 143, 194, 245, 296	OUT_0_1_DIV[4]	OUT_0_1_DIV[3]	OUT_0_1_DIV[2]	OUT_0_1_DIV[1]	OUT_0_1_DIV[0]	RSRVD	OUT_2_SEL[1]	OUT_2_SEL[0]
42, 93, 144, 195, 246, 297	OUT_2_MODE1[1]	OUT_2_MODE1[0]	OUT_2_MODE2[1]	OUT_2_MODE2[0]	OUT_3_SEL[1]	OUT_3_SEL[0]	OUT_3_MODE1[1]	OUT_3_MODE1[0]
43, 94, 145, 196, 247, 298	OUT_3_MODE2[1]	OUT_3_MODE2[0]	OUT_2_3_DIV[7]	OUT_2_3_DIV[6]	OUT_2_3_DIV[5]	OUT_2_3_DIV[4]	OUT_2_3_DIV[3]	OUT_2_3_DIV[2]
44, 95, 146, 197, 248, 299	OUT_2_3_DIV[1]	OUT_2_3_DIV[0]	CH_4_MUX[1]	CH_4_MUX[0]	OUT_4_SEL[1]	OUT_4_SEL[0]	OUT_4_MODE1[1]	OUT_4_MODE1[0]
45, 96, 147, 198, 249, 300	OUT_4_MODE2[1]	OUT_4_MODE2[0]	OUT_4_DIV[7]	OUT_4_DIV[6]	OUT_4_DIV[5]	OUT_4_DIV[4]	OUT_4_DIV[3]	OUT_4_DIV[2]

Copyright © 2015–2016, Texas Instruments Incorporated

EEPROM Map (continued)

Byte #	Bit7	Bit6	Bit5	Bit4	Bit3	Bit2	Bit1	Bit0
46, 97, 148, 199, 250, 301	OUT_4_DIV[1]	OUT_4_DIV[0]	CH_5_MUX[1]	CH_5_MUX[0]	OUT_5_SEL[1]	OUT_5_SEL[0]	OUT_5_MODE1[1]	OUT_5_MODE1[0]
47, 98, 149, 200, 251, 302	OUT_5_MODE2[1]	OUT_5_MODE2[0]	OUT_5_DIV[7]	OUT_5_DIV[6]	OUT_5_DIV[5]	OUT_5_DIV[4]	OUT_5_DIV[3]	OUT_5_DIV[2]
48, 99, 150, 201, 252, 303	OUT_5_DIV[1]	OUT_5_DIV[0]	CH_6_MUX[1]	CH_6_MUX[0]	OUT_6_SEL[1]	OUT_6_SEL[0]	OUT_6_MODE1[1]	OUT_6_MODE1[0]
49, 100, 151, 202, 253, 304	OUT_6_MODE2[1]	OUT_6_MODE2[0]	OUT_6_DIV[7]	OUT_6_DIV[6]	OUT_6_DIV[5]	OUT_6_DIV[4]	OUT_6_DIV[3]	OUT_6_DIV[2]
50, 101, 152, 203, 254, 305	OUT_6_DIV[1]	OUT_6_DIV[0]	CH_7_MUX[1]	CH_7_MUX[0]	OUT_7_SEL[1]	OUT_7_SEL[0]	OUT_7_MODE1[1]	OUT_7_MODE1[0]
51, 102, 153, 204, 255, 306	OUT_7_MODE2[1]	OUT_7_MODE2[0]	OUT_7_DIV[7]	OUT_7_DIV[6]	OUT_7_DIV[5]	OUT_7_DIV[4]	OUT_7_DIV[3]	OUT_7_DIV[2]
52, 103, 154, 205, 256, 307	OUT_7_DIV[1]	OUT_7_DIV[0]	RSRVD	RSRVD	PLLCMOSPREDIV[1]	PLLCMOSPREDIV[0]	STATUS1MUX[1]	STATUS1MUX[0]
53, 104, 155, 206, 257, 308	STATUS0MUX[1]	STATUS0MUX[0]	CMOSDIV0[7]	CMOSDIV0[6]	CMOSDIV0[5]	CMOSDIV0[4]	CMOSDIV0[3]	CMOSDIV0[2]
54, 105, 156, 207, 258, 309	CMOSDIV0[1]	CMOSDIV0[0]	RSRVD	RSRVD	RSRVD	RSRVD	RSRVD	RSRVD
55, 106, 157, 208, 259, 310	RSRVD	RSRVD	CH_7_PREDRVR	CH_6_PREDRVR	CH_5_PREDRVR	CH_4_PREDRVR	CH_3_PREDRVR	CH_2_PREDRVR
56, 107, 158, 209, 260, 311	CH_1_PREDRVR	CH_0_PREDRVR	STATUS1SLEW[1]	STATUS1SLEW[0]	STATUS0SLEW[1]	STATUS0SLEW[0]	SECBUFSEL[1]	SECBUFSEL[0]
57, 108, 159, 210, 261, 312	PRIBUFSEL[1]	PRIBUFSEL[0]	RSRVD	RSRVD	INSEL_PLL[1]	INSEL_PLL[0]	CLKMUX_BYPASS	RSRVD
58, 109, 160, 211, 262, 313	RSRVD	RSRVD	RSRVD	SECBUFGAIN	PRIBUFGAIN	PLLRDIV[2]	PLLRDIV[1]	PLLRDIV[0]
59, 110, 161, 212, 263, 314	PLLMDIV[4]	PLLMDIV[3]	PLLMDIV[2]	PLLMDIV[1]	PLLMDIV[0]	RSRVD	RSRVD	RSRVD

Copyright © 2015–2016, Texas Instruments Incorporated

EEPROM Map (continued)

Byte #	Bit7	Bit6	Bit5	Bit4	Bit3	Bit2	Bit1	Bit0
60, 111, 162, 213, 264, 315	RSRVD	RSRVD	RSRVD	RSRVD	RSRVD	PLL_P[2]	PLL_P[1]	PLL_P[0]
61, 112, 163, 214, 265, 316	PLL_SYNC_EN	PLL_PDN	RSRVD	PRI_D	PLL_CP[3]	PLL_CP[2]	PLL_CP[1]	PLL_CP[0]
62, 113, 164, 215, 266, 317	PLL_NDIV[11]	PLL_NDIV[10]	PLL_NDIV[9]	PLL_NDIV[8]	PLL_NDIV[7]	PLL_NDIV[6]	PLL_NDIV[5]	PLL_NDIV[4]
63, 114, 165, 216, 267, 318	PLL_NDIV[3]	PLL_NDIV[2]	PLL_NDIV[1]	PLL_NDIV[0]	PLL_NUM[21]	PLL_NUM[20]	PLL_NUM[19]	PLL_NUM[18]
64, 115, 166, 217, 268, 319	PLL_NUM[17]	PLL_NUM[16]	PLL_NUM[15]	PLL_NUM[14]	PLL_NUM[13]	PLL_NUM[12]	PLL_NUM[11]	PLL_NUM[10]
65, 116, 167, 218, 269, 320	PLL_NUM[9]	PLL_NUM[8]	PLL_NUM[7]	PLL_NUM[6]	PLL_NUM[5]	PLL_NUM[4]	PLL_NUM[3]	PLL_NUM[2]
66, 117, 168, 219, 270, 321	PLL_NUM[1]	PLL_NUM[0]	PLL_DEN[21]	PLL_DEN[20]	PLL_DEN[19]	PLL_DEN[18]	PLL_DEN[17]	PLL_DEN[16]
67, 118, 169, 220, 271, 322	PLL_DEN[15]	PLL_DEN[14]	PLL_DEN[13]	PLL_DEN[12]	PLL_DEN[11]	PLL_DEN[10]	PLL_DEN[9]	PLL_DEN[8]
68, 119, 170, 221, 272, 323	PLL_DEN[7]	PLL_DEN[6]	PLL_DEN[5]	PLL_DEN[4]	PLL_DEN[3]	PLL_DEN[2]	PLL_DEN[1]	PLL_DEN[0]
69, 120, 171, 222, 273, 324	PLL_DTHRMODE[1]	PLL_DTHRMODE[0]	PLL_ORDER[1]	PLL_ORDER[0]	PLL_LF_R2[5]	PLL_LF_R2[4]	PLL_LF_R2[3]	PLL_LF_R2[2]
70, 121, 172, 223, 274, 325	PLL_LF_R2[1]	PLL_LF_R2[0]	PLL_LF_C1[2]	PLL_LF_C1[1]	PLL_LF_C1[0]	PLL_LF_R3[6]	PLL_LF_R3[5]	PLL_LF_R3[4]
71, 122, 173, 224, 275, 326	PLL_LF_R3[3]	PLL_LF_R3[2]	PLL_LF_R3[1]	PLL_LF_R3[0]	PLL_LF_C3[2]	PLL_LF_C3[1]	PLL_LF_C3[0]	RSRVD
72, 123, 174, 225, 276, 327	RSRVD	RSRVD	RSRVD	1	RSRVD	SEC_D	RSRVD	RSRVD
73, 124, 175, 226, 277, 328	RSRVD	RSRVD	RSRVD	RSRVD	RSRVD	RSRVD	RSRVD	RSRVD

Copyright © 2015–2016, Texas Instruments Incorporated

EEPROM Map (continued)

Byte #	Bit7	Bit6	Bit5	Bit4	Bit3	Bit2	Bit1	Bit0
74, 125, 176, 227, 278, 329	RSRVD	RSRVD	RSRVD	RSRVD	RSRVD	RSRVD	RSRVD	RSRVD
75, 126, 177, 228, 279, 330	RSRVD	RSRVD	RSRVD	RSRVD	RSRVD	RSRVD	RSRVD	RSRVD
76, 127, 178, 229, 280, 331	RSRVD	RSRVD	RSRVD	RSRVD	RSRVD	RSRVD	RSRVD	RSRVD
77, 128, 179, 230, 281, 332	RSRVD	RSRVD	RSRVD	RSRVD	RSRVD	RSRVD	RSRVD	RSRVD
78, 129, 180, 231, 282, 333	RSRVD	RSRVD	RSRVD	RSRVD	RSRVD	RSRVD	RSRVD	RSRVD
79, 130, 181, 232, 283, 334	RSRVD	RSRVD	RSRVD	RSRVD	RSRVD	RSRVD	RSRVD	RSRVD
80, 131, 182, 233, 284, 335	RSRVD	RSRVD	RSRVD	RSRVD	RSRVD	RSRVD	RSRVD	RSRVD
81, 132, 183, 234, 285, 336	RSRVD	RSRVD	RSRVD	RSRVD	RSRVD	RSRVD	RSRVD	RSRVD
82, 133, 184, 235, 286, 337	RSRVD	RSRVD	RSRVD	RSRVD	RSRVD	RSRVD	RSRVD	RSRVD
83, 134, 185, 236, 287, 338	RSRVD	MARGIN_OPTION[1]	MARGIN_OPTION[0]	STAT0_SEL[3]	STAT0_SEL[2]	STAT0_SEL[1]	STAT0_SEL[0]	STAT0_POL
84, 135, 186, 237, 288, 339	STAT1_SEL[3]	STAT1_SEL[2]	STAT1_SEL[1]	STAT1_SEL[0]	STAT1_POL	DETECT_BYP	TERM2GND_SEC	TERM2GND_PRI
85, 136, 187, 238, 289, 340	DIFFTERM_SEC	DIFFTERM_PRI	AC_MODE_SEC	AC_MODE_PRI	CMOSCHPWDN	CH7PWDN	CH6PWDN	CH5PWDN
86, 137, 188, 239, 290, 341	CH4PWDN	CH23PWDN	CH01PWDN	PLL_STRETCH	PLL_DISABLE_4TH[2]	PLL_DISABLE_4TH[1]	PLL_DISABLE_4TH[0]	PLL_CLSDWAIT[1]
87, 138, 189, 240, 291, 342	PLL_CLSDWAIT[0]	PLL_VCOWAIT[1]	PLL_VCOWAIT[0]	PLL_LOOPBW	RSRVD	RSRVD	1	1

Copyright © 2015–2016, Texas Instruments Incorporated

EEPROM Map (continued)

Byte #	Bit7	Bit6	Bit5	Bit4	Bit3	Bit2	Bit1	Bit0
88, 139, 190, 241, 292, 343	RSRVD	RSRVD	RSRVD	RSRVD	RSRVD	XOOFFSET_STEP4[9]	XOOFFSET_STEP4[8]	XOOFFSET_STEP4[7]
89, 140, 191, 242, 293, 344	XOOFFSET_STEP4[6]	XOOFFSET_STEP4[5]	XOOFFSET_STEP4[4]	XOOFFSET_STEP4[3]	XOOFFSET_STEP4[2]	XOOFFSET_STEP4[1]	XOOFFSET_STEP4[0]	SECONSWITCH

Copyright © 2015–2016, Texas Instruments Incorporated

11 Application and Implementation

NOTE

Information in the following applications sections is not part of the TI component specification, and TI does not warrant its accuracy or completeness. TI's customers are responsible for determining suitability of components for their purposes. Customers should validate and test their design implementation to confirm system functionality.

11.1 Application Information

The LMK03318 is an ultra-low jitter clock generator that can be used to provide reference clocks for high-speed serial links resulting in improved system performance. The LMK03318 also supports a variety of features that aids the hardware designer during the system debug and validation phase.

11.2 Typical Applications

11.2.1 Application Block Diagram Examples

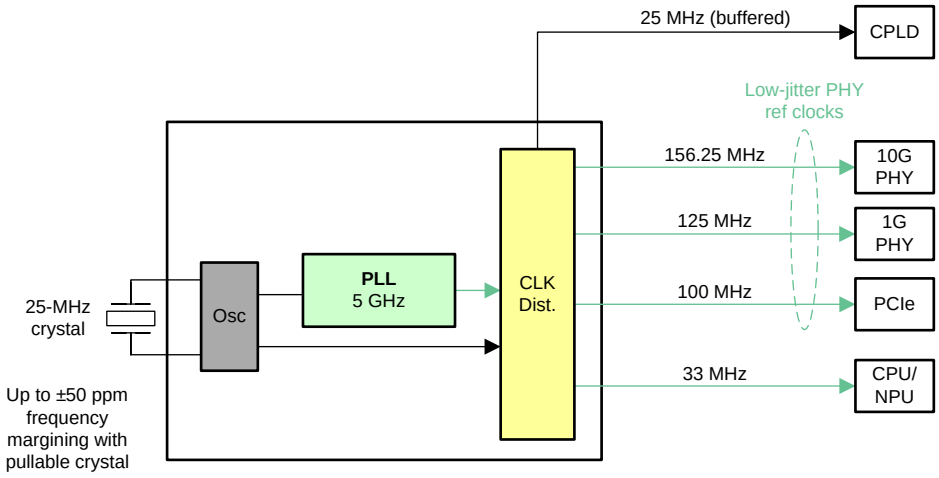

Figure 76. 10 Gb Ethernet Switch/Router Line Card

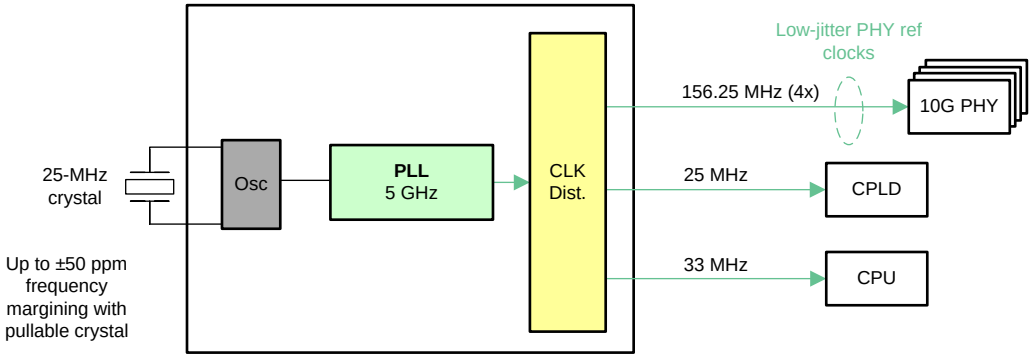

Figure 77. 10-Gb Ethernet Switch

Copyright © 2015–2016, Texas Instruments Incorporated

Typical Applications (continued)

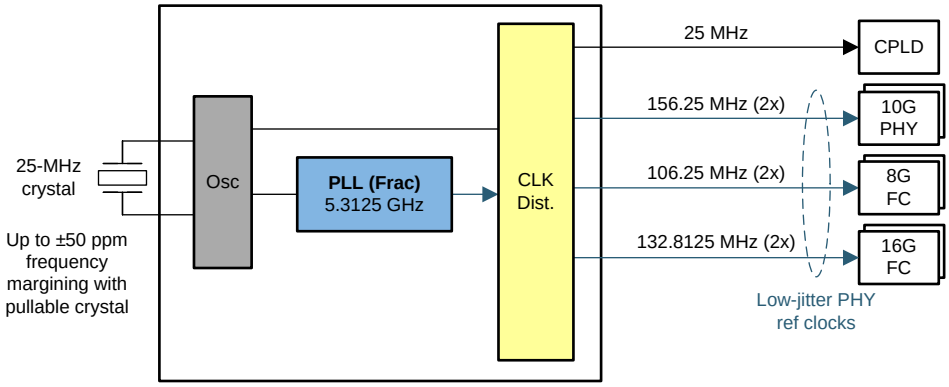

Figure 78. Storage Area Network With Fibre Channel Over Ethernet (FCoE)

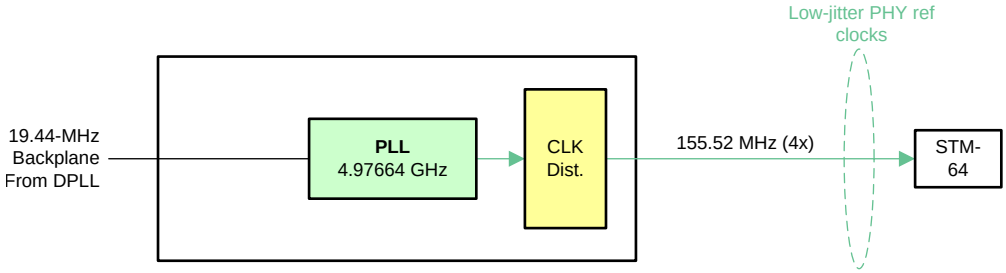

Figure 79. SDH Line Card

11.2.2 Jitter Considerations in Serdes Systems

Jitter-sensitive applications such as 10 Gbps or 100 Gbps Ethernet, deploy a serial link utilizing a Serializer in the transmit section (TX) and a De-serializer in the receive section (RX). These SERDES blocks are typically embedded in an ASIC or FPGA. Estimating the clock jitter impact on the link budget requires understanding of the TX PLL bandwidth and the RX CDR bandwidth.

As can be seen in Figure 80, the pass band region between the TX low pass cutoff and RX high pass cutoff frequencies is the range over which the reference clock jitter adds without any attenuation to the jitter budget of the link. Outside of these frequencies, the SERDES link will attenuate the reference clock jitter with a 20 dB/dec or even steeper roll-off. Modern ASIC or FPGA designs have some flexibility on deciding the optimal RX CDR bandwidth and TX PLL bandwidth. These bandwidths are typically set based on what is achievable in the ASIC or FPGA process node, without increasing design complexity, and on any jitter tolerance or wander specification that needs to be met, as related to the RX CDR bandwidth.

The overall allowable jitter in a serial link is dictated by IEEE or other relevant standards. For example, IEEE802.3ba states that the maximum transmit jitter (peak-peak) for 10 Gbps Ethernet should be no more than 0.28 * UI and this equates to a 27.1516 ps, p-p for the overall allowable transmit jitter.

The jitter contributing elements are made up of the reference clock, generated potentially from a device like LMK03318, the transmit medium, transmit driver etc. Only a portion of the overall allowable transmit jitter is allocated to the reference clock, typically 20% or lower. Therefore, the allowable reference clock jitter, for a 20% clock jitter budget, is 5.43 ps, p-p.

Jitter in a reference clock is made up of deterministic jitter (arising from spurious signals due to supply noise or mixing from other outputs or from the reference input) and random jitter (usually due to thermal noise and other uncorrelated noise sources). A typical clock tree in a serial link system consists of clock generators and fanout buffers. The allowable reference clock jitter of 5.43 ps, p-p is needed at the output of the fanout buffer. Modern fanout buffers have low additive random jitter (less than 100 fs, rms) with no substantial contribution to the deterministic jitter. Therefore, the clock generator and fanout buffer contribute to the random jitter while the primary contributor to the deterministic jitter is the clock generator. Rule of thumb, for modern clock generators, is to allocate 25% of allowable reference clock jitter to the deterministic jitter and 75% to the random jitter. This

Typical Applications (continued)

amounts to an allowable deterministic jitter of 1.36 ps, p-p and an allowable random jitter of 4.07 ps, p-p. For serial link systems that need to meet a BER of 10^{-12}, the allowable random jitter in root-mean-square is 0.29 ps, rms. This is calculated by dividing the p-p jitter by 14 for a BER of 10^{-12}. Accounting for random jitter from the fanout buffer, the random jitter needed from the clock generator is 0.27 ps, rms. This is calculated by the root-mean-square subtraction from the desired jitter at the fanout buffer's output assuming 100 fs, rms of additive jitter from the fanout buffer.

With careful frequency planning techniques, like spur optimization (covered in the Spur Mitigation Techniques section) and on-chip LDOs to suppress supply noise, the LMK03318 is able to generate clock outputs with deterministic jitter that is below 1 ps, p-p and random jitter that is below 0.2 ps, rms. This gives the serial link system with additional margin on the allowable transmit jitter resulting in a BER better than 10^{-12}.

Copyright © 2015–2016, Texas Instruments Incorporated

Typical Applications (continued)

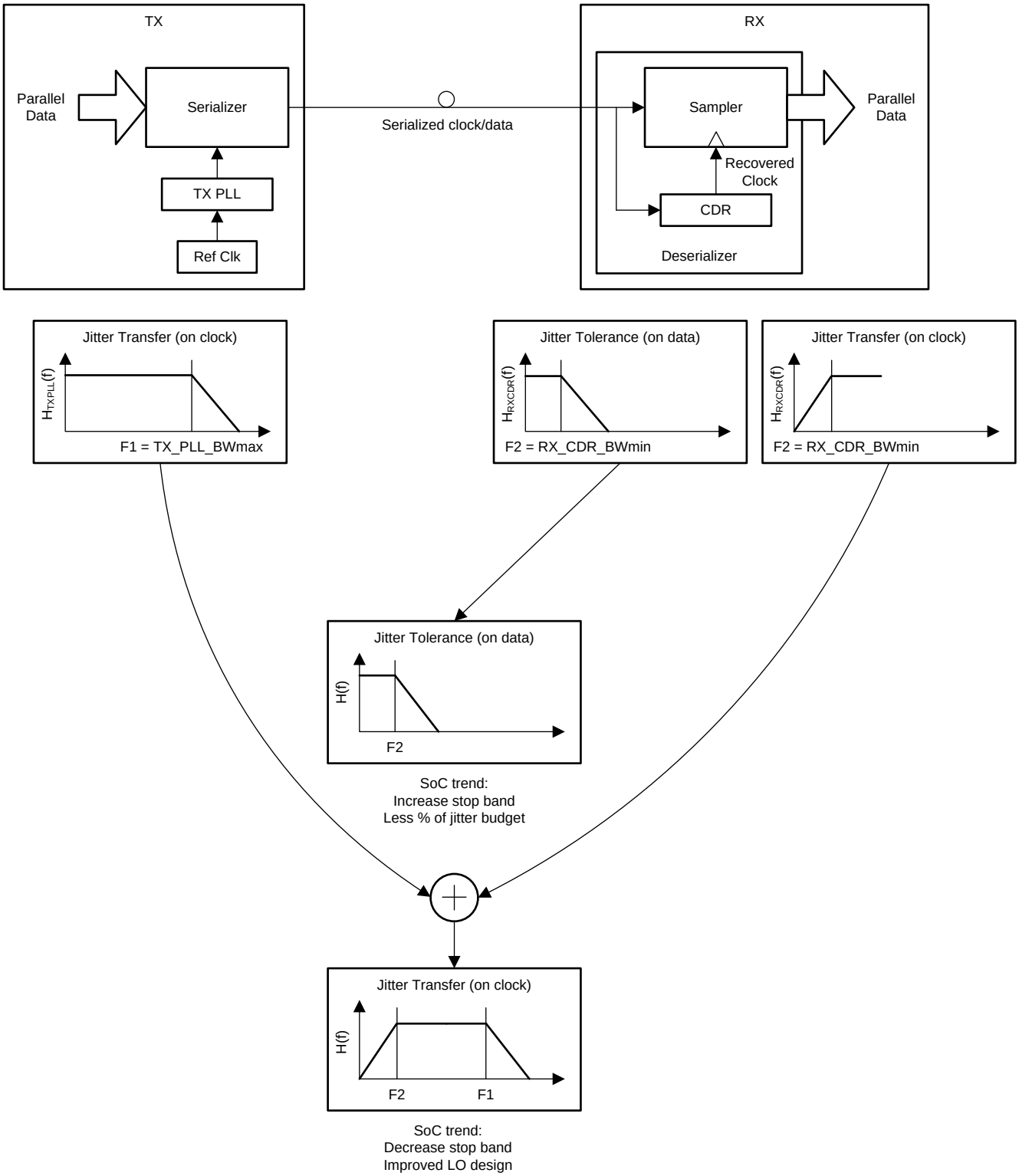

Figure 80. Dependence of Clock Jitter in Serial Links

Typical Applications (continued)

11.2.3 Frequency Margining

11.2.3.1 Fine Frequency Margining

IEEE802.3 dictates that Ethernet frames stay compliant to the standard specifications when clocked with a reference clock that is within ±100 ppm of its nominal frequency. In the worst case, an RX node with its local reference clock at –100 ppm from its nominal frequency should be able to work seamlessly with a TX node that has its own local reference clock at +100 ppm from its nominal frequency. Without any clock compensation on the RX node, the read pointer will severely lag behind the write pointer and cause FIFO overflow errors. On the contrary, when the RX node's local clock operates at 100 ppm from its nominal frequency and the TX node's local clock operates at –100 ppm from its nominal frequency, FIFO underflow errors occur without any clock compensation.

In order to prevent such overflow and underflow errors from occuring, modern ASICs and FGPAs include a clock compensation scheme that introduces elastic buffers. Such a system, shown in Figure 80, is validated thoroughly during the validation phase by interfacing slower nodes with faster ones and ensuring compliance to IEEE802.3. The LMK03318 provides the ability to fine tune the frequency of its outputs based on changing its on-chip load capacitance when operated with a crystal input. This fine tuning can be done via I2C or via the GPIO5 pin as described in *Crystal Input Interface (SEC_REF)*. A total of ±50 ppm frequency tuning is achievable when using pullable crystals whose C0/C1 ratio is less than 250. The change in load capacitance is implemented in a manner such that the outputs of the LMK03318 undergo a smooth monotic change in frequency.

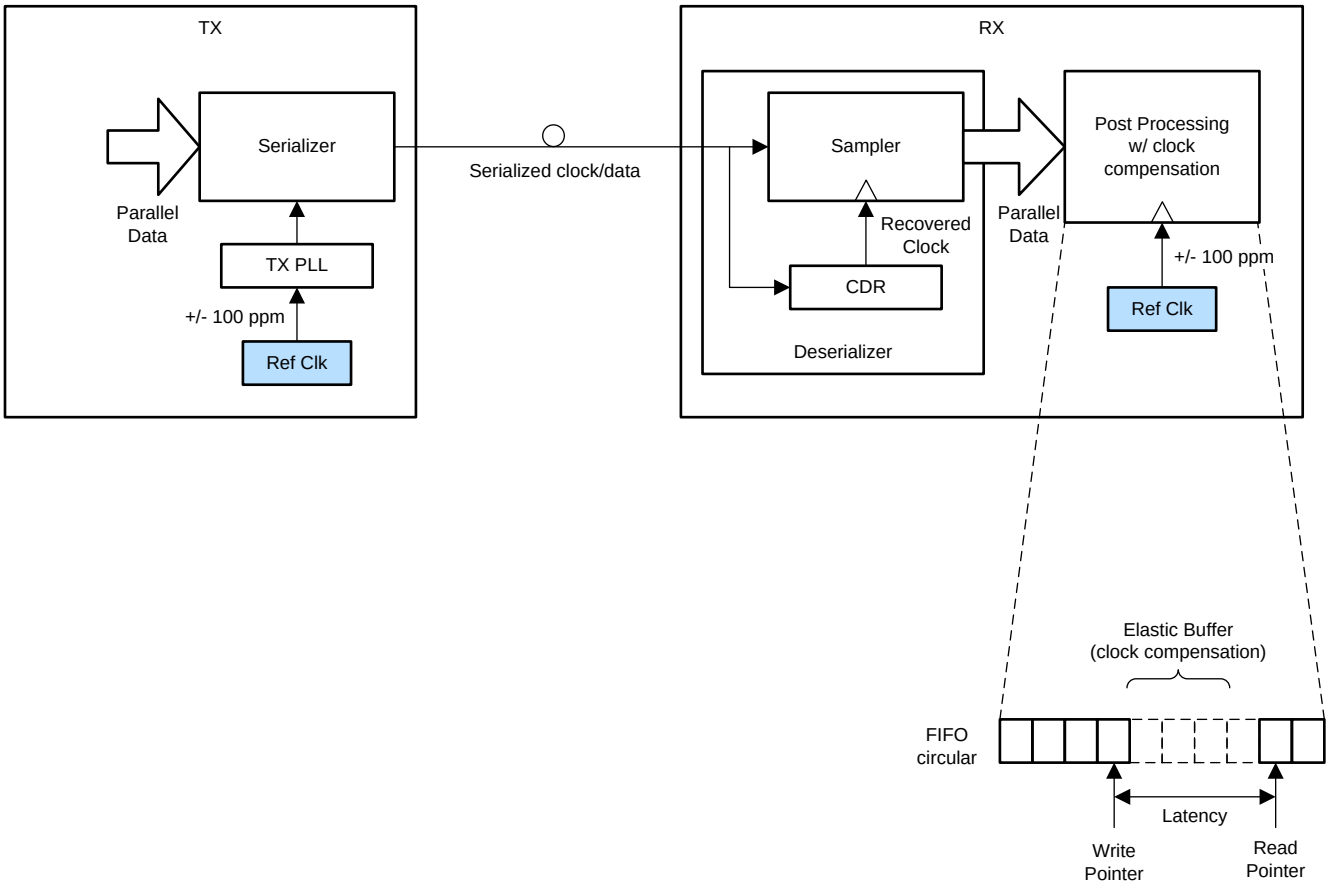

Figure 81. System Implementation with Clock Compensation for Standards Compliance

11.2.3.2 Coarse Frequency Margining

Certain systems require the processors to be tested at clock frequencies that are slower or faster by 5% or 10%. The LMK03318 offers the ability to change its output dividers for the desired change from its nominal output frequency without resulting in any glitches (as explained in High-Speed Output Divider).

Copyright © 2015–2016, Texas Instruments Incorporated

Typical Applications (continued)

11.2.4 Design Requirements

Consider a typical wired communications application, like a top-of-rack switch, which needs to clock high data rate 10 Gbps or 100 Gbps Ethernet PHYs and other macros like PCI Express, Fast Ethernet and CPLD. For such asynchronous systems, the reference input can be a crystal. In such systems, the clocks are expected to be available upon powerup without the need for any device-level programming. An example of clock input and output requirements are shown below:

- Clock Input:
  - 25 MHz crystal
- Clock Outputs:
  - 2x 156.25 MHz clock for uplink 10.3125 Gbps, LVPECL
  - 2x 125 MHz clock for downlink 3.125 Gbps, LVPECL
  - 2x 100 MHz clock for PCI Express, HCSL
  - 1x 25 MHz clock for Fast Ethernet, LVDS
  - 2x 33.3333 MHz clock for CPLD, 1.8-V LVCMOS

The section below describes the detailed design procedure to generate the required output frequencies for the above scenario using LMK03318.

11.2.4.1 Detailed Design Procedure

Design of all aspects of the LMK03318 is quite involved, and software support is available to assist in part selection, part programming, loop filter design, and phase-noise simulation. This design procedure will give a quick outline of the process.

1. Device Selection
   - The first step to calculate the specified VCO frequency given required output frequencies. The device must be able to produce the VCO frequency that can be divided down to the required output frequencies.
   - The WEBENCH Clock Architect Tool from TI will aid in the selection of the right device that meets the customer's output frequencies and format requirements.
2. Device Configuration
   - There are many device configurations to achieve the desired output frequencies from a device. However there are some optimizations and trade-offs to be considered.
   - The WEBENCH Clock Architect Tool attempts to maximize the phase detector frequency, use smallest dividers, and maximizes PLL charge pump current.
   - These guidelines below may be followed when configuring PLL related dividers or other related registers:
     - For lowest possible in-band PLL flat noise, maximize phase detector frequency to minimize N divide value.
     - For lowest possible in-band PLL flat noise, maximize charge pump current. The highest value charge pump currents often have similar performance due to diminishing returns.
     - To reduce loop filter component sizes, increase N value and/or reduce charge pump current.
     - For fractional divider values, keep the denominator at highest value possible in order to minimize spurs. It is also best to use higher order modulator wherever possible for the same reason.
     - As a rule of thumb, keeping the phase detector frequency approximately between 10 * PLL loop bandwidth and 100 * PLL loop bandwidth. A phase detector frequency less than 5 * PLL bandwidth may be unstable and a phase detector frequency > 100 * loop bandwidth may experience increased lock time due to cycle slipping.
3. PLL Loop Filter Design
   - It is recommended to use the WEBENCH Clock Architect Tool to design your loop filter.
   - Optimal loop filter design and simulation can be achieved when custom reference phase noise profiles are loaded into the software tool.
   - While designing the loop filter, adjusting the charge pump current or N value can help with loop filter component selection. Lower charge pump currents and larger N values result in smaller component values but may increase impacts of leakage and reduce PLL phase noise performance.
   - For a more detailed understanding of loop filter design can be found in Dean Banerjee's *PLL*

Typical Applications (continued)

Performance, Simulation, and Design (www.ti.com/tool/pll_book).

4. Clock Output Assignment
   - At the time of writing this datasheet, the design software does not take into account frequency assignment to specific outputs except to ensure that the output frequencies can be achieved. It is best to consider proximity of the clock outputs to each other and other PLL circuitry when choosing final clock output locations. Here are some guidelines to help achieve optimal performance when assigning outputs to specific clock output pins.
     - Group common frequencies together.
     - PLL charge pump circuitry can cause crosstalk at the charge pump frequency. Place outputs sharing charge pump frequency or lower priority outputs not sensitive to charge pump frequency spurs together.
     - Clock output MUXes can create a path for noise coupling. Factor in frequencies which may have some bleedthrough from non-selected mux inputs.
     - If possible, use outputs 0, 1, 2 or 3 since they don't have MUX in the clock path and have limited opportunity for cross coupled noise.
5. Device Programming
   - The EVM programming software tool CodeLoader can be used to program the device with the desired configuration.

11.2.4.1.1 Device Selection

Use the WEBENCH Clock Architect Tool. Enter the required frequencies and formats into the tool. To use this device, find a solution using the LMK03318.

11.2.4.1.1.1 Calculation Using LCM

In this example, the LCM (156.25 MHz, 125 MHz, 100 MHz, 33.3333 MHz, 25 MHz) = 2500 MHz. Valid VCO frequency for LMK03318 is 5 GHz (2500 × 2).

11.2.4.1.2 Device Configuration

For this example, when using the WEBENCH Clock Architect Tool, the reference would have been manually entered as 25 MHz according to input frequency requirements. Enter the desired output frequencies and click on 'Generate Solutions'. Select LMK03318 from the solution list.

From the simulation page of the WEBENCH Clock Architect Tool, it can be seen that to maximize phase detector frequencies, the PLL's R and M dividers are set to 1, doublers are disabled and N divider is set to 200. This results in a VCO frequency of 5 GHz. The tool also tries to select maximum possible value for the PLL post divider and for this example, it is set to 2. At this point the design meets all input and output frequency requirements and it is possible to design a loop filter for system and simulate performance on the clock outputs. However, consider also the following:

- At the time of release of this datasheet, the WEBENCH Clock Architect Tool doesn't assign outputs strategically for minimizing cross-coupled spurs and jitter.

11.2.4.1.3 PLL Loop Filter Design

The WEBENCH Clock Architect Tool allows loading a custom phase noise plot for reference inputs. For improved accuracy in simulation and optimum loop filter design, be sure to load these custom noise profiles. After loading a phase noise plot, user should recalculate the recommended loop filter design. The WEBENCH Clock Architect Tool will return solutions with high reference/phase detector frequencies by default. In the WEBENCH Clock Architect Tool the user may increase the reference divider to reduce the frequency if desired.

The next section will discuss PLL loop filter design specific to this example using default phase noise profiles.

Copyright © 2015–2016, Texas Instruments Incorporated

Typical Applications (continued)

NOTE

The WEBENCH Clock Architect Tool provides optimal loop filters upon selecting a solution from the solution list to simulate for the first time. Anytime PLL related inputs change, like input phase noise, charge pump current, divider values, and so forth, it is best to use the tool to re-calculate the optimal loop filter component values.

11.2.4.1.3.1 PLL Loop Filter Design

In the WEBENCH Clock Architect Tool simulator, click on the PLL loop filter design button, then press recommend design. For the PLL loop filter, maximum phase detector frequency and maximum charge pump current are typically used. The tool recommends a loop filter that is designed to minimize jitter. The integrated loop filters' components are minimized with this recommendation as to allow maximum flexibility in achieving wide loop bandwidths for low PLL noise. With the recommended loop filter calculated, this loop filter is ready to be simulated.

The PLL loop filter's bode plot can additionally be viewed and adjustments can be made to the integrated components. The effective loop bandwidth and phase margin with the updated values is then calculated. The integrated loop filter components are good to use when attempting to eliminate certain spurs. The recommended procedure is to increase C3 capacitance, then R3 resistance. Large R3 resistance can result in degraded VCO phase noise performance.

11.2.4.1.4 Clock Output Assignment

At this time the WEBENCH Clock Architect Tool does not assign output frequencies to specific output ports on the device with the intention to minimize cross-coupled spurs and jitter. The user may wish to make some educated re-assignment of outputs when using the EVM programming tool to configure the device registers appropriately.

In an effort to optimize device configuration for best jitter performance, following guidelines should be considered:

- Since the clock outputs, intended to be used to clock high data rates, are needed with lowest possible jitter, it is best to assign 156.25 MHz to outputs 0, 1 and assign 125 MHz to outputs 2, 3.
- Coupling between outputs at different frequencies appear as spurs at offsets that is at the frequency difference between the outputs and its harmonics. Typical SerDes reference clocks need to have low integrated jitter upto an offset of 20 MHz and thus, to minimize cross coupling between output 3 and output 4, it is best to assign 100 MHz to outputs 4 and 5.
- The 25 MHz can then be assigned to output 6.
- The 1.8-V LVCMOS clock at 33.3333 MHz is assigned to output 7 and it is best to select complementary LVCMOS operation. This helps to minimize coupling from this output channel to other outputs.

11.2.4.2 Spur Mitigation Techniques

The LMK03318 offers several programmable features for optimizing fractional spurs. In order to get the best out of these features, it makes sense to understand the different kinds of spurs as well as their behaviors, causes, and remedies. Although optimizing spurs may involve some trial and error, there are ways to make this process more systematic.

11.2.4.2.1 Phase Detector Spurs

The phase detector spur occurs at an offset from the carrier equal to the phase detector frequency, f_{PD}. To minimize this spur, a lower phase detector frequency should be considered. In some cases where the loop bandwidth is very wide relative to the phase detector frequency, some benefit might be gained from using a narrower loop bandwidth or adding poles to the loop filter by using R3 and C3 if previously unused, but otherwise the loop filter has minimal impact. Bypassing at the supply pins and board layout can also have an impact on this spur, especially at higher phase detector frequencies.

Typical Applications (continued)

11.2.4.2.2 Integer Boundary Fractional Spurs

This spur occurs at an offset equal to the difference between the VCO frequency and the closest integer channel for the VCO. For instance, if the phase detector frequency is 100 MHz and the VCO frequency is 5003 MHz, then the integer boundary spur would be at 3 MHz offset. This spur can be either PLL or VCO dominated. If it is PLL dominated, decreasing the loop bandwidth and some of the programmable fractional words may impact this spur. If the spur is VCO dominated, then reducing the loop filter will not help, but rather reducing the phase detector and having good slew rate and signal integrity at the selected reference input will help.

11.2.4.2.3 Primary Fractional Spurs

These spurs occur at multiples of f_{PD}/DEN and are not integer boundary spurs. For instance, if the phase detector frequency is 100 MHz and the fraction is 3/100, the primary fractional spurs would be at 1 MHz, 2 MHz, 4 MHz, 5 MHz, 6 MHz etc. These are impacted by the loop filter bandwidth and modulator order. If a small frequency error is acceptable, then a larger equivalent fraction may improve these spurs. This larger unequivalent fraction pushes the fractional spur energy to much lower frequencies where they do not significantly impact the system peformance.

11.2.4.2.4 Sub-Fractional Spurs

These spurs appear at a fraction of f_{PD}/DEN and depend on modulator order. With the first order modulator, there are no sub-fractional spurs. The second order modulator can produce 1/2 sub-fractional spurs if the denominator is even. A third order modulator can produce sub-fractional spurs at 1/2, 1/3, or 1/6 of the offset, depending if it is divisible by 2 or 3. For instance, if the phase detector frequency is 100 MHz and the fraction is 3/100, no sub-fractional spurs for a first order modulator or sub-fractional spurs at multiples of 1.5 MHz for a second or third order modulator would be expected. Aside from strategically choosing the fractional denominator and using a lower order modulator, another tactic to eliminate these spurs is to use dithering and express the fraction in larger equivalent terms. Since dithering also adds phase noise, its level needs to be managed to achieve acceptable phase noise and spurious performance.

Table 19 gives a summary of the spurs discussed so far and techniques to mitigate them.

Table 19. Spurs and Mitigation Techniques

SPUR TYPE	OFFSET	WAYS TO REDUCE	TRADE-OFFS
Phase Detector	f_{PD}	Reduce Phase Detector Frequency.	Although reducing the phase detector frequency does improve this spur, it also degrades phase noise.
Integer Boundary	f_{VCO} mod f_{PD}	**Methods for PLL Dominated Spurs** -Avoid the worst case VCO frequencies if possible. -Ensure good slew rate and signal integrity at reference input. -Reduce loop bandwidth or add more filter poles to suppress out of band spurs.	Reducing the loop bandwidth may degrade the total integrated noise if the bandwidth is too narrow.
		Methods for VCO Dominated Spurs -Avoid the worst case VCO frequencies if possible. -Reduce Phase Detector Frequency. -Ensure good slew rate and signal integrity at reference input.	Reducing the phase detector may degrade the phase noise.
Primary Fractional	f_{PD}/DEN	-Decrease Loop Bandwidth. -Change Modulator Order. use Larger Unequivalent Fractions.	Decreasing the loop bandwidth may degrade in-band phase noise. Also, larger unequivalent fractions don't always reduce spurs.

Copyright © 2015–2016, Texas Instruments Incorporated

Typical Applications (continued)

Table 19. Spurs and Mitigation Techniques (continued)

SPUR TYPE	OFFSET	WAYS TO REDUCE	TRADE-OFFS
Sub-Fractional	f_{PD}/DEN/k k=2,3, or 6	use Dithering. use Larger Equivalent Fractions. use Larger Unequivalent Fractions. -Reduce Modulator Order. -Eliminate factors of 2 or 3 in denominator.	Dithering and larger fractions may increase phase noise.

12 Power Supply Recommendations

12.1 Device Power Up Sequence

Figure 82 shows the power up sequence of the LMK03318 in both the hard pin mode and soft pin mode.

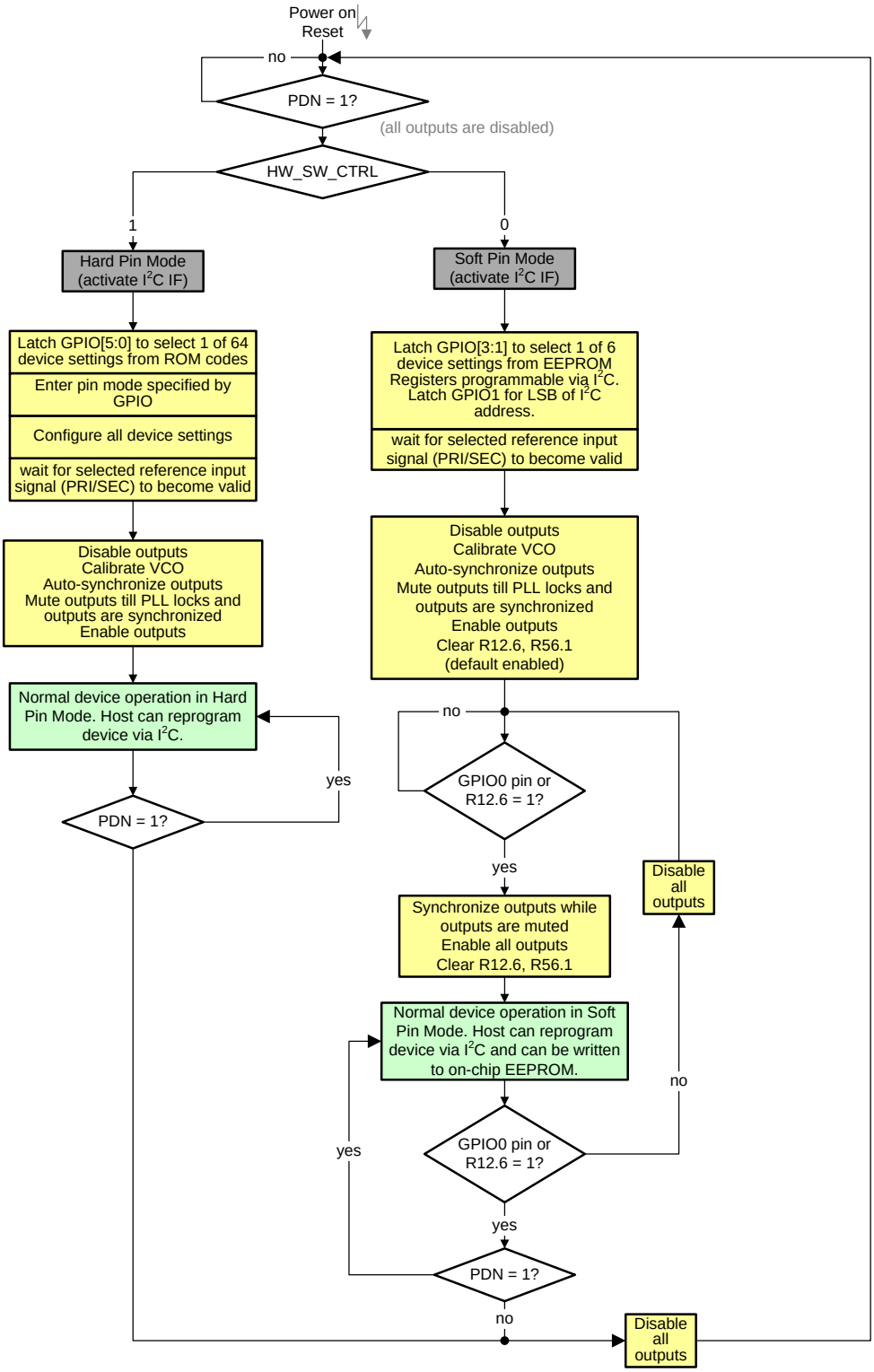

Figure 82. Flow Chart for Device Power Up and Configuration

Copyright © 2015–2016, Texas Instruments Incorporated

12.2 Device Power Up Timing

Before the outputs are enabled after power up, the LMK03318 goes through the initialization routine given in Table 20.

Table 20. LMK03318 Power Up Initialization Routine

Parameter	Definition	Duration	Comments
T_{PWR}	Step 1: Power up ramp	Depends on customer supply ramp time	The POR monitor holds the device in power-down/reset until the core supply voltages reaches 2.72 V (min) to 2.95 V (max) and VDDO_01 reaches 1.7 V (min).
T_{XO}	Step 2: XO startup (if crystal is used)	Depends on XTAL. Could be several ms; For TXC 25 MHz typical XTAL startup time measures 100 µs.	This step assumes PDN=1. The XTAL startup time is the time it takes for the XTAL to oscillate with sufficient amplitude. The LMK03318 has a built-in amplitude detection circuit, and halts the PLL lock sequence until the XTAL stage has sufficient swing.
$T_{CAL\text{-}PLL}$	Step 3: Closed loop calibration period for PLL	Programmable cycles of internal 10 MHz oscillator.	This counter is needed for the PLL loop to stabilize. It can also be used to provide additional delay time for the selected PLL reference input to stabilize, in case the reference detection circuit validates the input too soon. The duration can range from 30 µs to 300 ms and programmed in R119[3-2]. Recommended duration for PLL as clock generator (loop bandwidth > 10 kHz) is 300 µs and for PLL as jitter cleaner (loop bandwidth < 1 kHz) is 300 ms.
T_{VCO}	Step 4: VCO wait period	Programmable cycles of internal 10 MHz oscillator.	This counter is needed for the VCO to stabilize. The duration can range from 20 µs to 200 ms and programmed in R119[1-0]. Recommended duration for VCO1 is 400 µs.
$T_{LOCK\text{-}PLL}$	Step 5: PLL lock time	~4/LBW of PLL	The Outputs turn on immediately after calibration. A small frequency error remains for the duration of ~4/LBW (so in clock generator mode typically 10 µs for a PLL bandwidth of 400 kHz). The initial output frequency will be lower than the target output frequency, as the loop filter starts out initially discharged.
$T_{LOL\text{-}PLL}$	Step 6: PLL LOL indicator low	~1 PFD clock cycle	The PLL loss of lock indicator if selected on STATUS0 or STATUS1 will go low after 1 PFD clock cycle to indicate PLL is now locked.

The LMK03318 start-up time for the PLL is defined as the time taken, from the moment the core supplies reach 2.72 V and VDDO_01 reaches 1.7 V, for the PLL to be locked and valid outputs are available at the outputs with no more than ±300 ppm error. Startup time for the PLL can be calculated as

$$T_{PLL\text{-}SU} = T_{XO} + T_{CAL\text{-}PLL} + T_{VCO} + T_{LOCK\text{-}PLL} \quad (5)$$

12.3 Power Down

The PDN pin (active low) can be used both as device power-down pin and to initialize the device. When this pin is pulled low, the entire device is powered down. When it is pulled high, the power-on/reset (POR) sequence is triggered and causes all registers to be set to an initial state. The initial state is determined by the device control pins as described in the *Device Configuration Control* section. When PDN is pulled low, I^2C is disabled. When PDN is pulled high, the device power-up sequence is initiated as described in *Device Power Up Sequence* and *Device Power Up Timing*.

Table 21. PDN Control

PDN Pin State	Device operation
0	Device is disabled
1	Normal operation

12.4 Power Rail Sequencing, Power Supply Ramp Rate, and Mixing Supply Domains

12.4.1 Mixing Supplies

The LMK03318 incorporates flexible power supply architecture. It is recommended that the VDD_IN, VDD_PLL, VDD_LDO and VDD_DIG supplies are driven by the same 3.3 V supply rail, but the individual VDDO_x supplies can be driven from separate 1.8 V, 2.5 V or 3.3 V supply rails. Lowest power consumption can be realized by operating the VDD_IN, VDD_PLL, VDD_LDO and VDD_DIG supplies from a 3.3 V rail and the VDDO_x supplies from a 1.8 V rail.

12.4.2 Power-On Reset

The LMK03318 integrates a built-in power-on reset (POR) circuit, that holds the device in reset until all of the following conditions have been met:

- the VDD_IN, VDD_PLL, VDD_LDO, or VDD_DIG supplies have reached at least 2.72 V
- the VDDO_01 supply has reached at least 1.7 V
- the PDN pin has reached at least 1.2 V

After this POR release, device internal counters start (see *Device Power Up Timing*) followed by device calibration.

12.4.3 Powering Up From Single Supply Rail

As long as the VDD_IN, VDD_PLL, VDD_LDO, and VDD_DIG, and VDDO_01 supplies are driven by the same 3.3 V supply rail that ramp in a monotonic manner from 0 V to 3.135 V, irrespective of the ramp time, then there is no requirement to add a capacitor on the PDN pin to externally delay the device power-up sequence. As shown in Figure 83, the PDN pin can be left floating, or otherwise driven by a host controller for meeting the clock sequencing requirements in the system.

Copyright © 2015–2016, Texas Instruments Incorporated

Power Rail Sequencing, Power Supply Ramp Rate, and Mixing Supply Domains (continued)

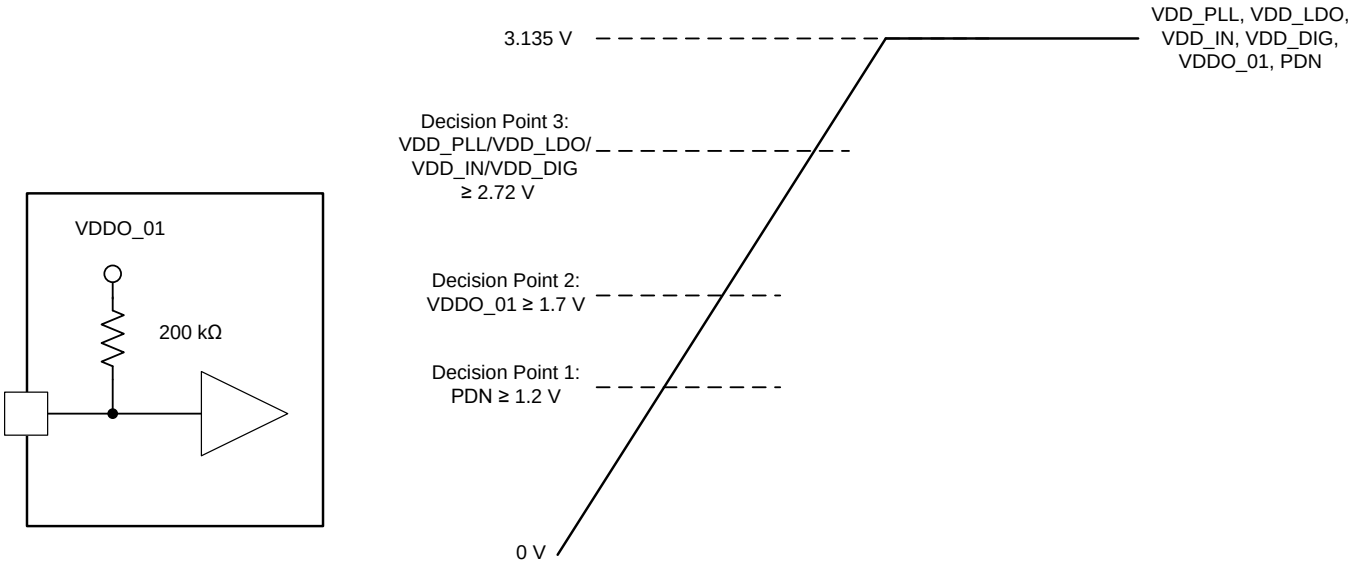

Figure 83. Recommendations for Power Up from Single Supply Rail

12.4.4 Powering Up From Split Supply Rails

If the VDD_IN, VDD_PLL, VDD_LDO, and VDD_DIG, and VDDO_01 supplies are driven from different supply rails, irrespective of the ramp time from 0 V to 3.135 V on the core supplies, it is recommended to start the PLL calibration until after all of the core supplies have settled at 3.135 V. This can be realized by delaying the PDN low-to-high transition. The PDN input incorporates a 200 kΩ resistor to VDDO_01 and as shown in Figure 84, a capacitor from the PDN pin to GND can be used to form a R-C time constant with the internal pull-up resistor. This R-C time constant can be designed to delay the low-to-high transition of PDN, until all of the core supplies have settled at 3.135 V.

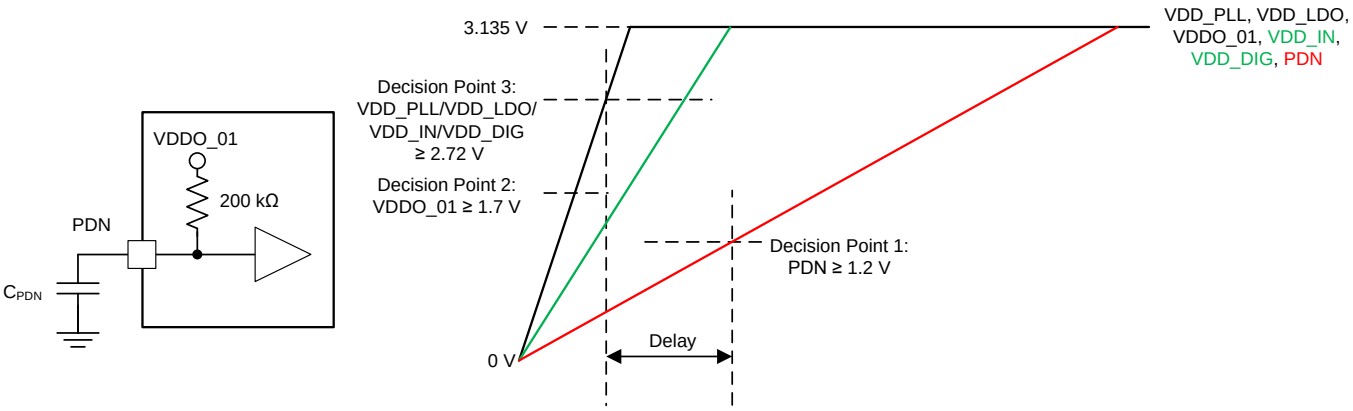

Figure 84. Recommendations for Power Up from Split Supply Rails

12.4.5 Slow Power-Up Supply Ramp

In case the VDD_IN, VDD_PLL, VDD_LDO, and VDD_DIG, and VDDO_01 supplies ramp slowly with a ramp time from 0 V to 3.135 V of over 100 ms, it is recommended to start the PLL calibration until after all of the core supplies have settled at 3.135 V. This can be realized by delaying the PDN low-to-high transition in a manner similar to the condition detailed in *Powering Up From Split Supply Rails* and shown in Figure 84.

Power Rail Sequencing, Power Supply Ramp Rate, and Mixing Supply Domains (continued)

12.4.6 Non-monotonic Power-Up Supply Ramp

In case the VDD_IN, VDD_PLL, VDD_LDO, and VDD_DIG, and VDDO_01 supplies ramp in a non-monotonic manner from 0 V to 3.135 V, it is recommended to start the PLL calibration until after all of the core supplies have settled at 3.135 V. This can be realized by delaying the PDN low-to-high transition in a manner similar to the condition detailed in *Powering Up From Split Supply Rails* and shown in Figure 84.

12.4.7 Slow Reference Input Clock Startup

If the reference input clock is direct coupled to the LMK03318 and has a very slow startup time of over 10 ms, as defined from the time power supply reaches acceptable operating voltage for the reference input generator, which is typically 2.97 V for a 3.3 V supply, to the time when the reference input has a stable clock output, additional care needs to be taken to prevent unsuccessful PLL calibration. In the case of the reference input building up its amplitude slowly, it is recommended to set the input buffer to differential irrespective of the input type (LVCMOS or differential). In case of LVCMOS inputs, it is also recommended to enable on-chip termination by setting R29.4 (for primary input) and/or R29.5 (for secondary input) to 1. There is one of two additional steps that need to be taken. The first approach is to add a capacitor to GND on the PDN pin that forms a R-C time constant with the internal 200 kΩ pull-up resistor. This R-C time constant can be designed to delay the low-to-high transition of PDN, until after the reference input clock is stable. The second approach is to program a larger PLL closed loop delay in R119[3-2] that is longer than the time taken for the reference input clock to be stable.

12.5 Power Supply Bypassing

Figure 85 shows two conceptual layouts detailing recommended placement of power supply bypass capacitors. If the capacitors are mounted on the back side, 0402 components can be employed; however, soldering to the Thermal Dissipation Pad can be difficult. For component side mounting, use 0201 body size capacitors to facilitate signal routing. Keep the connections between the bypass capacitors and the power supply on the device as short as possible. Ground the other side of the capacitor using a low impedance connection to the ground plane.

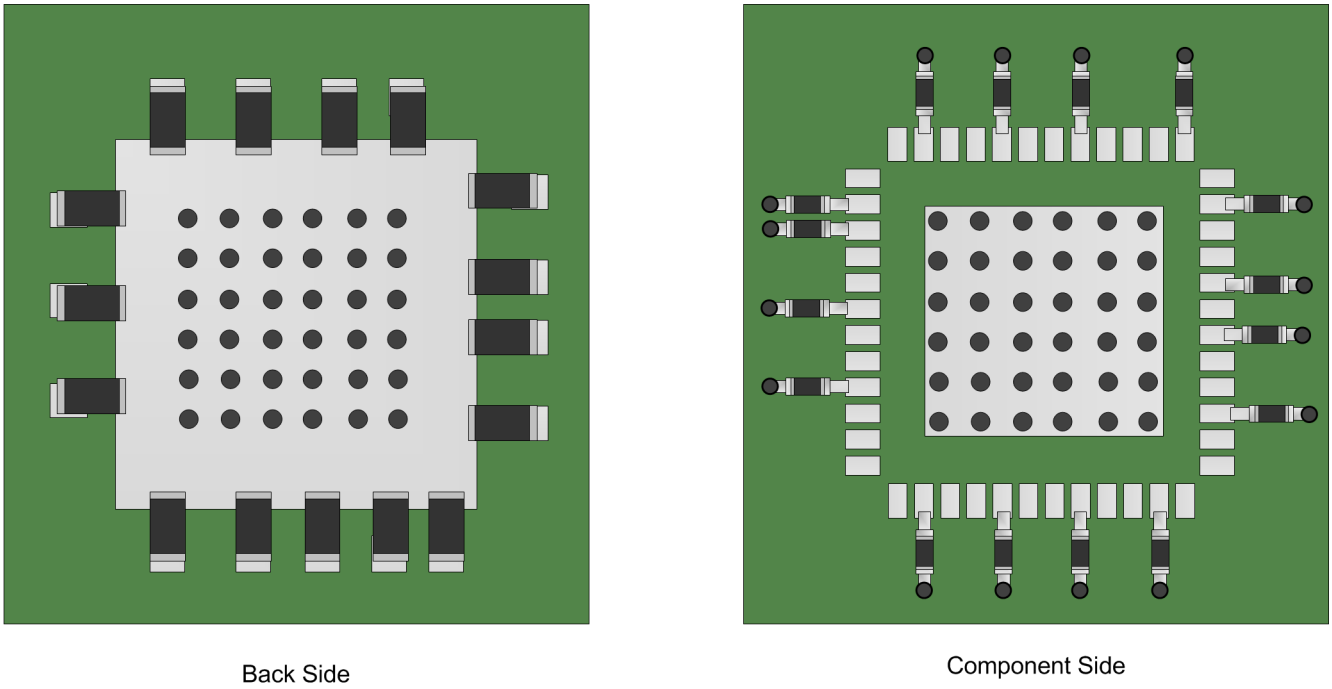

Figure 85. Conceptual Placement of Power Supply Bypass Capacitors (NOT Representative of LMK03318 Supply Pin Locations)

Copyright © 2015–2016, Texas Instruments Incorporated

13 Layout

13.1 Layout Guidelines

The following section provides the layout guidelines to ensure good thermal and electrical performance for the LMK03318.

13.1.1 Ensure Thermal Reliability

The LMK03318 is a high performance device. Therefore, careful attention must be paid to device configuration and printed circuit board (PCB) layout with respect to device power consumption and thermal considerations. Employing a thermally-enhanced PCB layout can insure good thermal dissipation from the device to the PCB layers. Observing good thermal layout practices enables the thermal slug, or die attach pad (DAP), on the bottom of the QFN-48 package to provide a good thermal path between the die contained within the package and the ambient air through the PCB interface. This thermal pad also serves as the singular ground connection the device; therefore, a low-inductance connection to multiple PCB ground layers (both internal and external) is essential.

13.1.2 Layout Example

Figure 86 shows a PCB layout example showing the application of thermal design practices and low-inductance ground connection between the device DAP and the PCB. Connecting a 6 x 6 thermal via pattern and using multiple PCB ground layers (for example, 8- or 10-layer PCB) can help to reduce the junction-to-ambient thermal resistance, as indicated in the *Thermal Information* section. The 6 × 6 filled via pattern facilitates both considerations.

Layout Guidelines (continued)

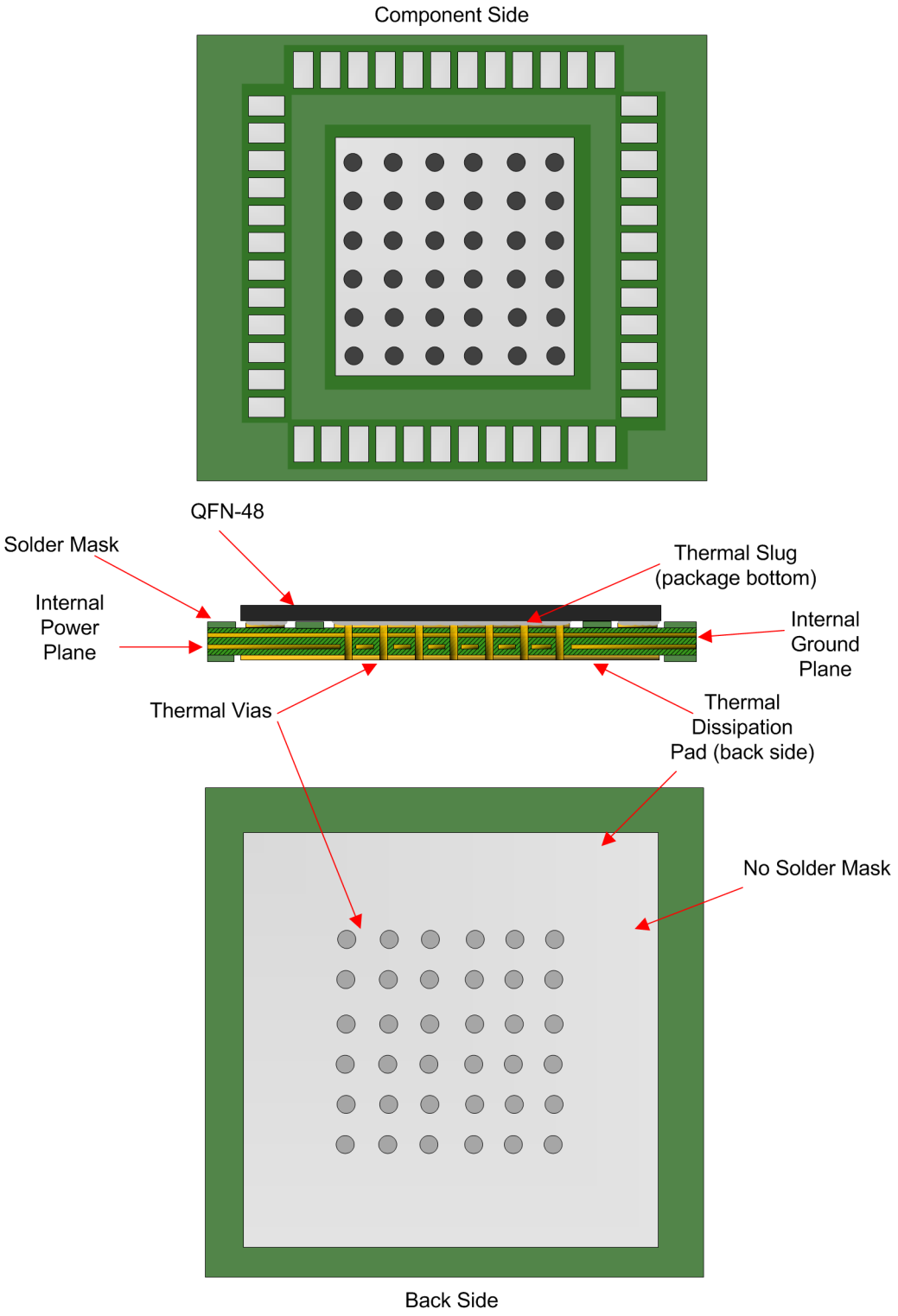

Figure 86. 4-Layer PCB Thermal Layout Example for LMK03318 (8+ Layers Recommended)

Copyright © 2015–2016, Texas Instruments Incorporated

14 Device and Documentation Support

14.1 Device Support

14.1.1 Third-Party Products Disclaimer

TI'S PUBLICATION OF INFORMATION REGARDING THIRD-PARTY PRODUCTS OR SERVICES DOES NOT CONSTITUTE AN ENDORSEMENT REGARDING THE SUITABILITY OF SUCH PRODUCTS OR SERVICES OR A WARRANTY, REPRESENTATION OR ENDORSEMENT OF SUCH PRODUCTS OR SERVICES, EITHER ALONE OR IN COMBINATION WITH ANY TI PRODUCT OR SERVICE.

14.2 Receiving Notification of Documentation Updates

To receive notification of documentation updates, navigate to the device product folder on ti.com. In the upper right corner, click on *Alert me* to register and receive a weekly digest of any product information that has changed. For change details, review the revision history included in any revised document.

14.3 Community Resources

The following links connect to TI community resources. Linked contents are provided "AS IS" by the respective contributors. They do not constitute TI specifications and do not necessarily reflect TI's views; see TI's Terms of Use.

TI E2E™ Online Community ***TI's Engineer-to-Engineer (E2E) Community.*** Created to foster collaboration among engineers. At e2e.ti.com, you can ask questions, share knowledge, explore ideas and help solve problems with fellow engineers.

Design Support ***TI's Design Support*** Quickly find helpful E2E forums along with design support tools and contact information for technical support.

14.4 Trademarks

E2E is a trademark of Texas Instruments.

14.5 Electrostatic Discharge Caution

These devices have limited built-in ESD protection. The leads should be shorted together or the device placed in conductive foam during storage or handling to prevent electrostatic damage to the MOS gates.

14.6 Glossary

SLYZ022 — *TI Glossary*.

This glossary lists and explains terms, acronyms, and definitions.

15 Mechanical, Packaging, and Orderable Information

The following pages include mechanical, packaging, and orderable information. This information is the most current data available for the designated devices. This data is subject to change without notice and revision of this document. For browser-based versions of this data sheet, refer to the left-hand navigation.

PACKAGING INFORMATION

Orderable Device	Status (1)	Package Type	Package Drawing	Pins	Package Qty	Eco Plan (2)	Lead/Ball Finish (6)	MSL Peak Temp (3)	Op Temp (°C)	Device Marking (4/5)	Samples
LMK03318RHSR	ACTIVE	WQFN	RHS	48	2500	Green (RoHS & no Sb/Br)	CU SN	Level-3-260C-168 HR	-40 to 85	K03318A	Samples
LMK03318RHST	ACTIVE	WQFN	RHS	48	250	Green (RoHS & no Sb/Br)	CU SN	Level-3-260C-168 HR	-40 to 85	K03318A	Samples

(1) The marketing status values are defined as follows:
ACTIVE: Product device recommended for new designs.
LIFEBUY: TI has announced that the device will be discontinued, and a lifetime-buy period is in effect.
NRND: Not recommended for new designs. Device is in production to support existing customers, but TI does not recommend using this part in a new design.
PREVIEW: Device has been announced but is not in production. Samples may or may not be available.
OBSOLETE: TI has discontinued the production of the device.

(2) Eco Plan - The planned eco-friendly classification: Pb-Free (RoHS), Pb-Free (RoHS Exempt), or Green (RoHS & no Sb/Br) - please check http://www.ti.com/productcontent for the latest availability information and additional product content details.
TBD: The Pb-Free/Green conversion plan has not been defined.
Pb-Free (RoHS): TI's terms "Lead-Free" or "Pb-Free" mean semiconductor products that are compatible with the current RoHS requirements for all 6 substances, including the requirement that lead not exceed 0.1% by weight in homogeneous materials. Where designed to be soldered at high temperatures, TI Pb-Free products are suitable for use in specified lead-free processes.
Pb-Free (RoHS Exempt): This component has a RoHS exemption for either 1) lead-based flip-chip solder bumps used between the die and package, or 2) lead-based die adhesive used between the die and leadframe. The component is otherwise considered Pb-Free (RoHS compatible) as defined above.
Green (RoHS & no Sb/Br): TI defines "Green" to mean Pb-Free (RoHS compatible), and free of Bromine (Br) and Antimony (Sb) based flame retardants (Br or Sb do not exceed 0.1% by weight in homogeneous material)

(3) MSL, Peak Temp. - The Moisture Sensitivity Level rating according to the JEDEC industry standard classifications, and peak solder temperature.

(4) There may be additional marking, which relates to the logo, the lot trace code information, or the environmental category on the device.

(5) Multiple Device Markings will be inside parentheses. Only one Device Marking contained in parentheses and separated by a "~" will appear on a device. If a line is indented then it is a continuation of the previous line and the two combined represent the entire Device Marking for that device.

(6) Lead/Ball Finish - Orderable Devices may have multiple material finish options. Finish options are separated by a vertical ruled line. Lead/Ball Finish values may wrap to two lines if the finish value exceeds the maximum column width.

Important Information and Disclaimer: The information provided on this page represents TI's knowledge and belief as of the date that it is provided. TI bases its knowledge and belief on information provided by third parties, and makes no representation or warranty as to the accuracy of such information. Efforts are underway to better integrate information from third parties. TI has taken and continues to take reasonable steps to provide representative and accurate information but may not have conducted destructive testing or chemical analysis on incoming materials and chemicals. TI and TI suppliers consider certain information to be proprietary, and thus CAS numbers and other limited information may not be available for release.

In no event shall TI's liability arising out of such information exceed the total purchase price of the TI part(s) at issue in this document sold by TI to Customer on an annual basis.

TAPE AND REEL INFORMATION

REEL DIMENSIONS

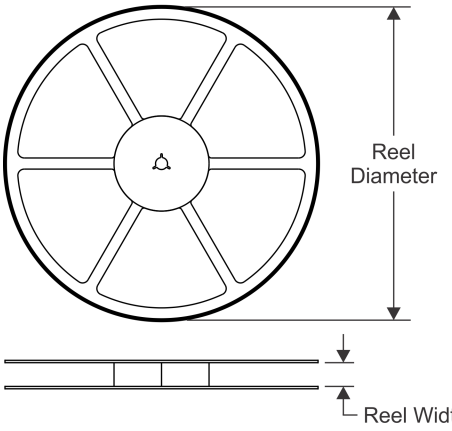

TAPE DIMENSIONS

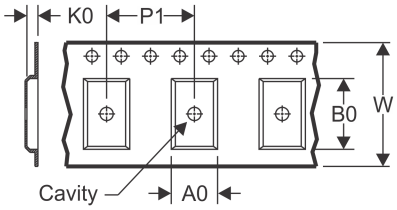

A0	Dimension designed to accommodate the component width
B0	Dimension designed to accommodate the component length
K0	Dimension designed to accommodate the component thickness
W	Overall width of the carrier tape
P1	Pitch between successive cavity centers

QUADRANT ASSIGNMENTS FOR PIN 1 ORIENTATION IN TAPE

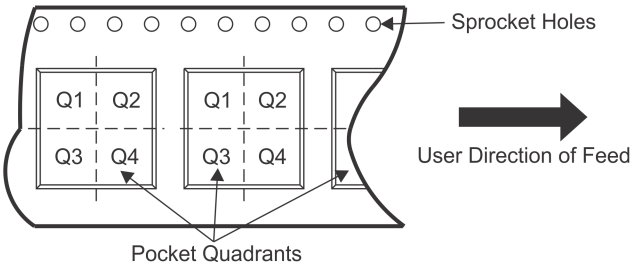

*All dimensions are nominal

Device	Package Type	Package Drawing	Pins	SPQ	Reel Diameter (mm)	Reel Width W1 (mm)	A0 (mm)	B0 (mm)	K0 (mm)	P1 (mm)	W (mm)	Pin1 Quadrant
LMK03318RHSR	WQFN	RHS	48	2500	330.0	16.4	7.3	7.3	1.3	12.0	16.0	Q1
LMK03318RHST	WQFN	RHS	48	250	178.0	16.4	7.3	7.3	1.3	12.0	16.0	Q1

TAPE AND REEL BOX DIMENSIONS

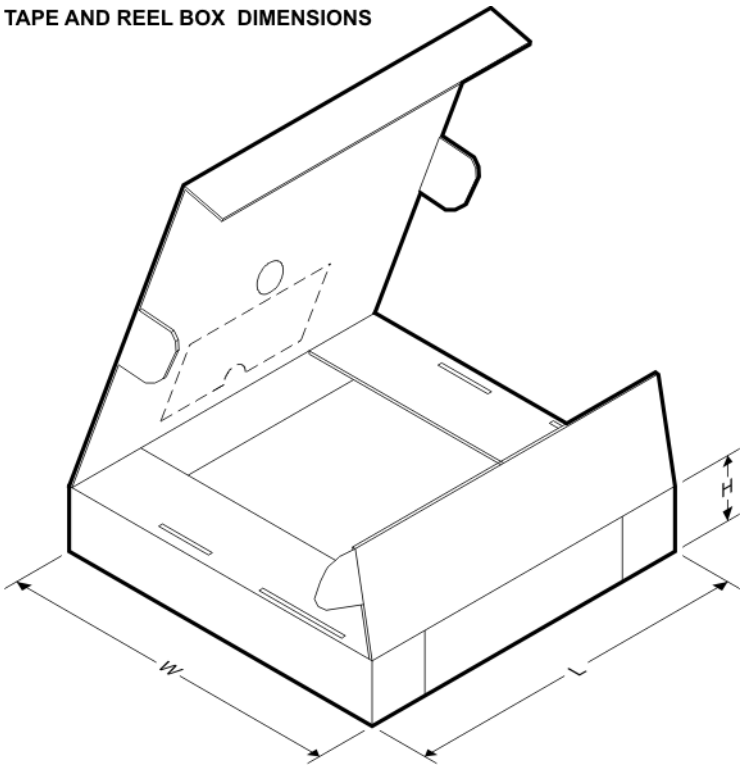

*All dimensions are nominal

Device	Package Type	Package Drawing	Pins	SPQ	Length (mm)	Width (mm)	Height (mm)
LMK03318RHSR	WQFN	RHS	48	2500	367.0	367.0	38.0
LMK03318RHST	WQFN	RHS	48	250	210.0	185.0	35.0

RHS0048B

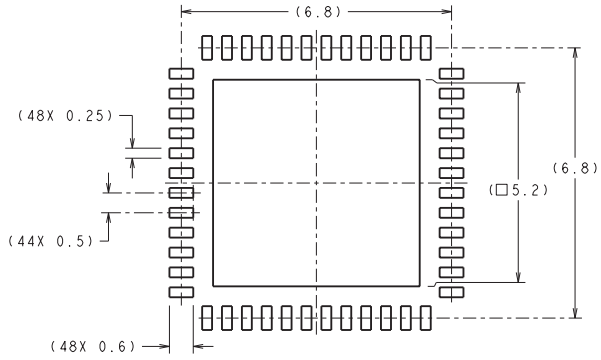

RECOMMENDED LAND PATTERN

DIMENSIONS ARE IN MILLIMETERS
DIMENSIONS IN ( ) FOR REFERENCE ONLY

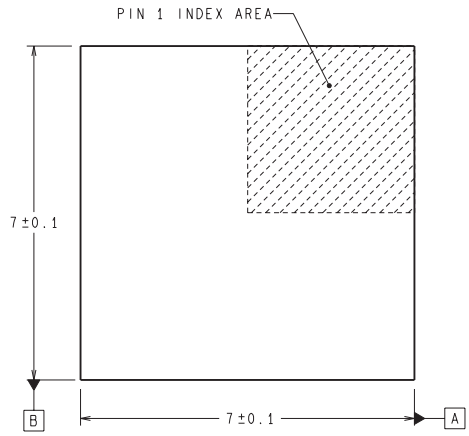

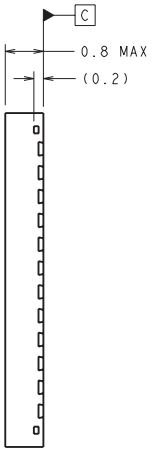

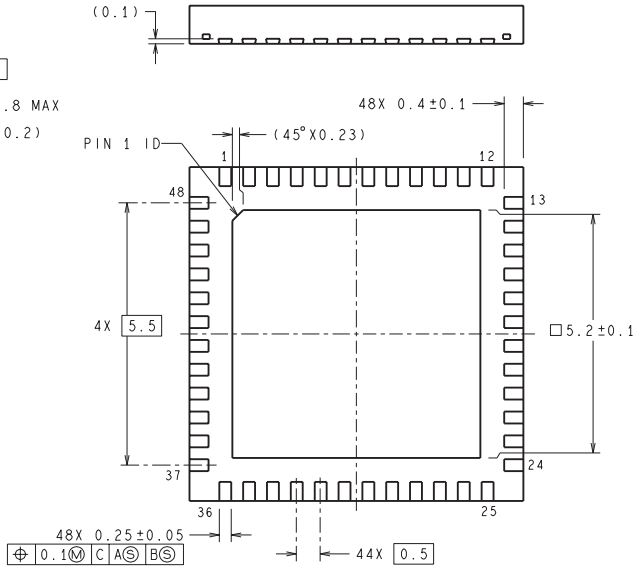

SQA48B (Rev A)

IMPORTANT NOTICE

Texas Instruments Incorporated and its subsidiaries (TI) reserve the right to make corrections, enhancements, improvements and other changes to its semiconductor products and services per JESD46, latest issue, and to discontinue any product or service per JESD48, latest issue. Buyers should obtain the latest relevant information before placing orders and should verify that such information is current and complete. All semiconductor products (also referred to herein as “components”) are sold subject to TI’s terms and conditions of sale supplied at the time of order acknowledgment.

TI warrants performance of its components to the specifications applicable at the time of sale, in accordance with the warranty in TI’s terms and conditions of sale of semiconductor products. Testing and other quality control techniques are used to the extent TI deems necessary to support this warranty. Except where mandated by applicable law, testing of all parameters of each component is not necessarily performed.

TI assumes no liability for applications assistance or the design of Buyers’ products. Buyers are responsible for their products and applications using TI components. To minimize the risks associated with Buyers’ products and applications, Buyers should provide adequate design and operating safeguards.

TI does not warrant or represent that any license, either express or implied, is granted under any patent right, copyright, mask work right, or other intellectual property right relating to any combination, machine, or process in which TI components or services are used. Information published by TI regarding third-party products or services does not constitute a license to use such products or services or a warranty or endorsement thereof. Use of such information may require a license from a third party under the patents or other intellectual property of the third party, or a license from TI under the patents or other intellectual property of TI.

Reproduction of significant portions of TI information in TI data books or data sheets is permissible only if reproduction is without alteration and is accompanied by all associated warranties, conditions, limitations, and notices. TI is not responsible or liable for such altered documentation. Information of third parties may be subject to additional restrictions.

Resale of TI components or services with statements different from or beyond the parameters stated by TI for that component or service voids all express and any implied warranties for the associated TI component or service and is an unfair and deceptive business practice. TI is not responsible or liable for any such statements.

Buyer acknowledges and agrees that it is solely responsible for compliance with all legal, regulatory and safety-related requirements concerning its products, and any use of TI components in its applications, notwithstanding any applications-related information or support that may be provided by TI. Buyer represents and agrees that it has all the necessary expertise to create and implement safeguards which anticipate dangerous consequences of failures, monitor failures and their consequences, lessen the likelihood of failures that might cause harm and take appropriate remedial actions. Buyer will fully indemnify TI and its representatives against any damages arising out of the use of any TI components in safety-critical applications.

In some cases, TI components may be promoted specifically to facilitate safety-related applications. With such components, TI’s goal is to help enable customers to design and create their own end-product solutions that meet applicable functional safety standards and requirements. Nonetheless, such components are subject to these terms.

No TI components are authorized for use in FDA Class III (or similar life-critical medical equipment) unless authorized officers of the parties have executed a special agreement specifically governing such use.

Only those TI components which TI has specifically designated as military grade or “enhanced plastic” are designed and intended for use in military/aerospace applications or environments. Buyer acknowledges and agrees that any military or aerospace use of TI components which have ***not*** been so designated is solely at the Buyer's risk, and that Buyer is solely responsible for compliance with all legal and regulatory requirements in connection with such use.

TI has specifically designated certain components as meeting ISO/TS16949 requirements, mainly for automotive use. In any case of use of non-designated products, TI will not be responsible for any failure to meet ISO/TS16949.

Products		**Applications**	
Audio	www.ti.com/audio	Automotive and Transportation	www.ti.com/automotive
Amplifiers	amplifier.ti.com	Communications and Telecom	www.ti.com/communications
Data Converters	dataconverter.ti.com	Computers and Peripherals	www.ti.com/computers
DLP® Products	www.dlp.com	Consumer Electronics	www.ti.com/consumer-apps
DSP	dsp.ti.com	Energy and Lighting	www.ti.com/energy
Clocks and Timers	www.ti.com/clocks	Industrial	www.ti.com/industrial
Interface	interface.ti.com	Medical	www.ti.com/medical
Logic	logic.ti.com	Security	www.ti.com/security
Power Mgmt	power.ti.com	Space, Avionics and Defense	www.ti.com/space-avionics-defense
Microcontrollers	microcontroller.ti.com	Video and Imaging	www.ti.com/video
RFID	www.ti-rfid.com		
OMAP Applications Processors	www.ti.com/omap	**TI E2E Community**	e2e.ti.com
Wireless Connectivity	www.ti.com/wirelessconnectivity		

Mailing Address: Texas Instruments, Post Office Box 655303, Dallas, Texas 75265
Copyright © 2016, Texas Instruments Incorporated