For more information, please visit the product page.

REV.	DESCRIPTION	DATE
A	NEW DRAWING	12/30/2009
B	operating temp added	3/25/2010
C	updated drawing to show tip slot, corrected material table	5/25/2010
D	updated drawing	5/26/2016

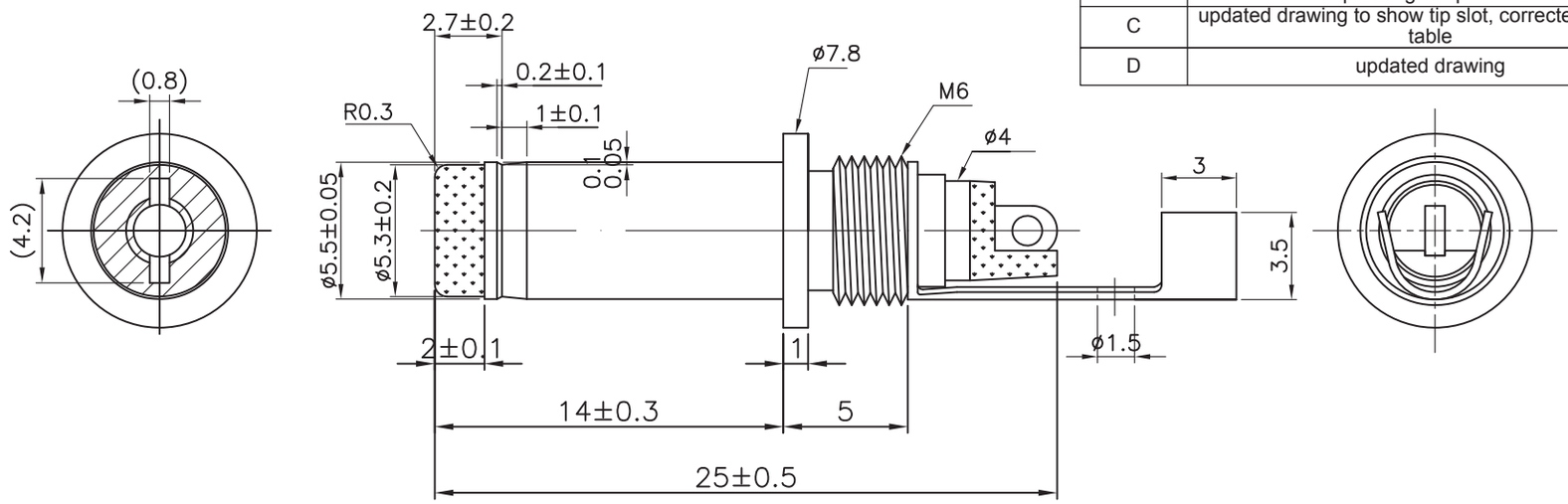

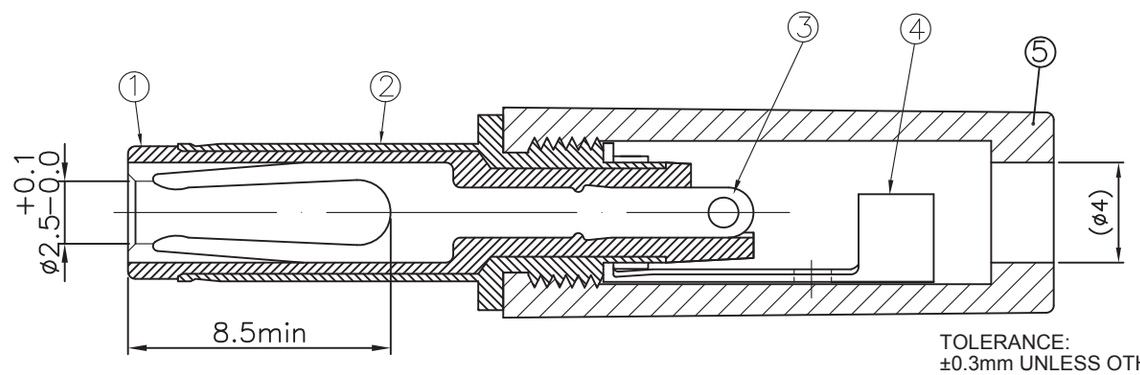

TOLERANCE:
±0.3mm UNLESS OTHERWISE SPECIFIED

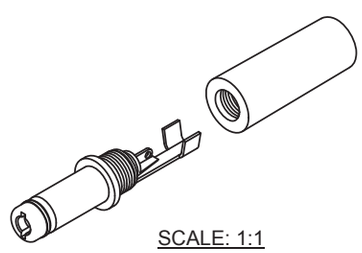

SCALE: 1:1

SPECIFICATIONS:
RATING: 16V DC @ 8A
CONTACT RESISTANCE: 30m OHMS MAX
INSULATION RESISTANCE: 100M OHMS MIN: 500V DC
VOLTAGE WITHSTAND: 500V AC R.M.S. FOR 1 MINUTE
OPERATING TEMP: -25° ~ +70°C
LIFE: 5,000 CYCLES

		MATERIAL	PLATING
1	TIP INSULATOR	PBT	black color
2	PIN	Brass	Nickel
3	BARREL	P-Bronze	Nickel
4	TERMINALS	Brass	Nickel
5	COVER	ABS	black color

CUI INC
20050 SW 112th Ave.
Tualatin, OR 97062
Phone: 503-612-2300
800-275-4899
Fax: 503-612-2383
Website: www.cui.com

TITLE: DC POWER JACK
REV: A
PART NO. PP3-002BH
UNITS: MM [INCHES]
DRAWN BY:
APPROVED BY:
SCALE: 4:1
PC FILE NAME: PP3-002BH

COPYRIGHT 2016 BY CUI INC.