REV.	DESCRIPTION	DATE
A	NEW DRAWING	8/7/2007
B	updated pin numbering	1/15/2008

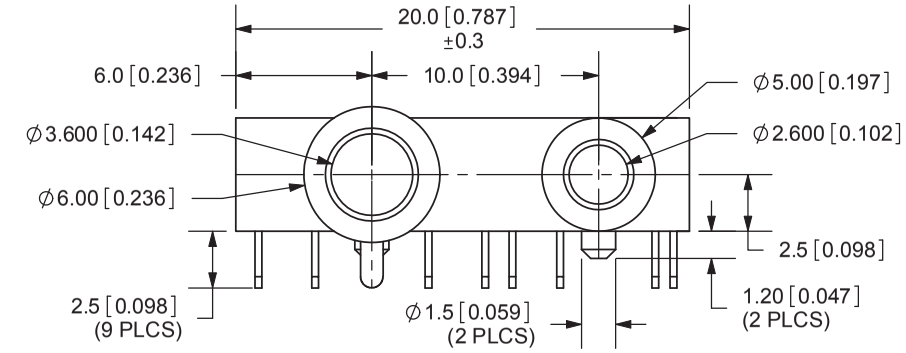

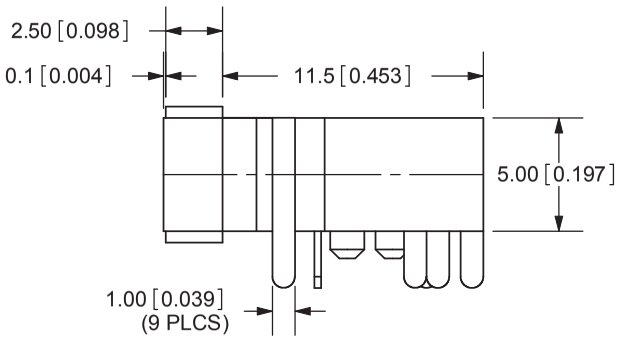

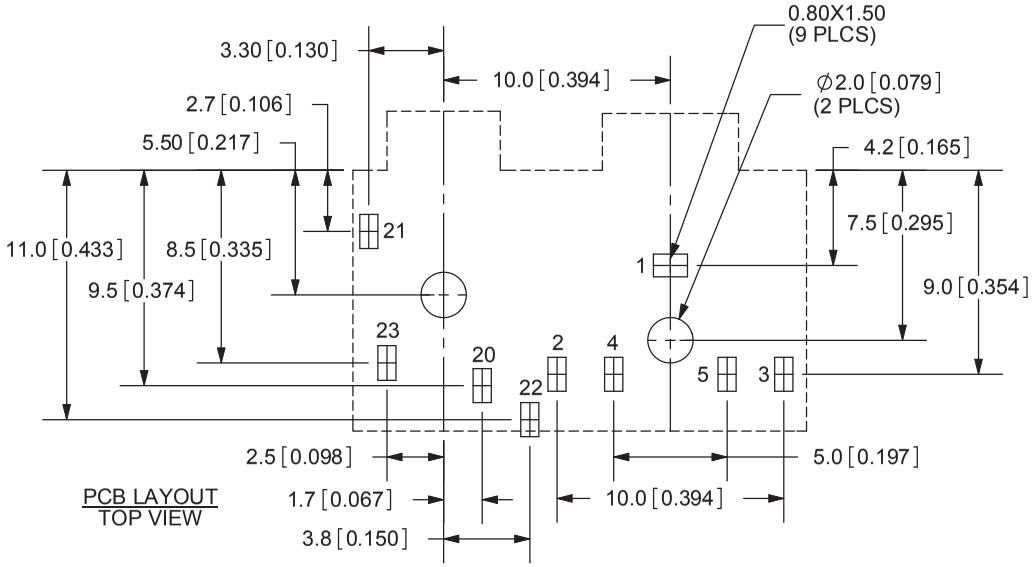

PCB LAYOUT
TOP VIEW

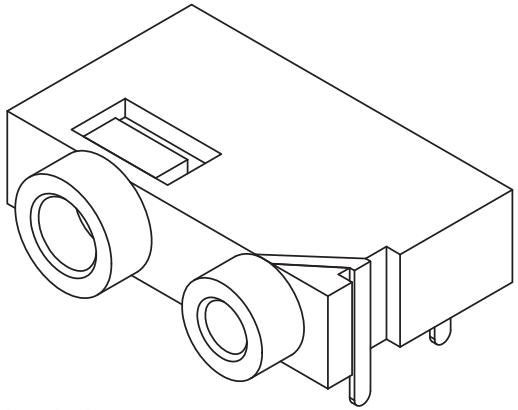

TOLERANCE:
X.X ±0.2mm
X.XX ±0.1mm
X.XXX ±0.05mm

SPECIFICATIONS:
RATING: 12V DC @ 1A
CONTACT RESISTANCE: 50m OHMS MAX
INSULATION RESISTANCE: 100M OHMS MIN: 500V DC
VOLTAGE WITHSTAND: 500V AC R.M.S. FOR 1 MINUTE
LIFE: 5,000 CYCLES
OPERATING TEMP: -25 ~ +85C

RoHS

MODEL NO.	SJD1-3201-54
SCHEMATIC	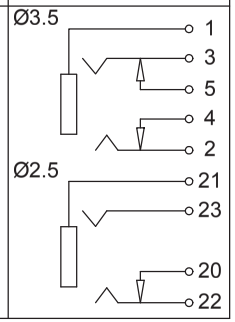

	MATERIAL	PLATING
TERMINAL 1	Copper Alloy	Tin
TERMINAL 2	Copper Alloy	Tin
TERMINAL 3	Copper Alloy	Tin
TERMINAL 4	Brass	Tin
TERMINAL 5	Brass	Tin
TERMINAL 20	Brass	Tin
TERMINAL 21	Copper Alloy	Tin
TERMINAL 22	Copper Alloy	Tin
TERMINAL 23	Copper Alloy	Tin
BUSHING	Brass	Nickel
HOUSING	PBT	

CUI INC
20050 SW 112th Ave.
Tualatin, OR 97062
Phone: 503-612-2300
800-275-4899
Fax: 503-612-2383
Website: www.cui.com

TITLE: 3.5/2.5mm COMBO JACK, PCB MOUNT
REV: B
PART NO. SJD1-3201-54
UNITS: MM [INCHES]
DRAWN BY: ZRJ
APPROVED BY:
SCALE: 3:1

PC FILE NAME: SJD1-3201-54

COPYRIGHT 2008 BY CUI INC.

For more information, please visit the product page.